PRODUCT SPECIFICATION

Customer :

Part No. :

Issue Date : 2022.05

Prepared	Checked	Approved
Customer Approval		

1. SCOPE :

This product specification specifies the product's performance and test methods as a basis for technical validation.

2. General Specification :

2.1 (Product application range) **:**

◆Backup power: RAM, detonator, car recorder, smart meter, vacuum switch, digital camera, motor drive

◆

Energy storage: intelligent three meters, UPS, security equipment, communication equipment, flashlights, water meters, gas meters, taillights, small appliances.

◆

High current operation: electrified railway, smart grid control, hybrid vehicle, wireless transmission.

◆

High-power support: wind power, locomotive start, ignition, electric cars, etc.

2.2 (Standard test conditions) **:**

The standard test conditions of this specification are standard atmospheric pressure, temperature 25 ° C, relative humidity less than 60%.

2.3 (Test basis) **:**

QC/T 741-2014《Vehicle super capacitor》

DL/T 1652-2016《Technical specifications for supercapacitors for electric energy metering equipment》

IEC62391-1-2006

3. Product Structure :

This product is based on the principle of electric double layer capacitors, using activated car bon as positive and negative electrodes inside, separated by electrolyte and diaphragm between the two electrodes, stainless steel shell.

4. General Specification

Project			Test Condition
Rated Voltage (25℃) U_0		5.5V	/
Category Temperature Range		-40℃~85℃	/
Storage temperature range (at 0V)		-40℃~85℃	/
Rated Capacitance (25℃)		0.1F	ΔV = 4.4V-2.75V
Permitting Capacitance Error		-20%~+180%	/
Internal Resistance	AC@1kHz	60Ω	/
Nominal Current (25℃)		0.024A	Charge to rated voltage U_0 , 5sdischarge to 1/2 U_0
Max Current (25℃)		0.029A	Charge to rated voltage U_0 , 1sdischarge to 1/2 U_0
Leakage Current at 72h (25℃)		5μA	/

5. Performance Index

Item		Specification/Condition
01	Low Temperature	Placed in an environment of -40℃ for 2 hours, there is no damage to the appearance, no leakage, and the capacity change rate does not exceed ±50%. (Discharge current 50~100μA)
	High temperature	Placed in a +85℃ environment, working for 16 hours, no damage to the appearance, no leakage, and the capacity change rate does not exceed ±30%.
02	High temperature load	+85℃ plus ≤5.0V voltage, after 1000h, | △C/C | ≤30%, ESR≤4 times the specified value.
03	Hig temperature storage	+85℃, 96h, after 2h standing at room temperature, the appearance is not damaged, no leakage, | △C/C | ≤10%, ESR≤2 times the initial value (25℃)
	LOW temperature storage	-40℃, 96h, after 2h standing at room temperature, the appearance is not damaged, no leakage, | △C/C | ≤10%,ESR≤2 times the initial value (25℃)
04	The steady state damp heat test	+40℃, 90-95%RH, 240h, | △C/C | ≤30%, ESR≤4 times the specified value.
05	Cycle life Expectancy	With rated voltage, 500,000 cycles of charging and discharging experiments at room temperature. | △C/C | ≤30%,ESR≤4 times the initial value (25℃)

7. Dimension (Unit :mm)

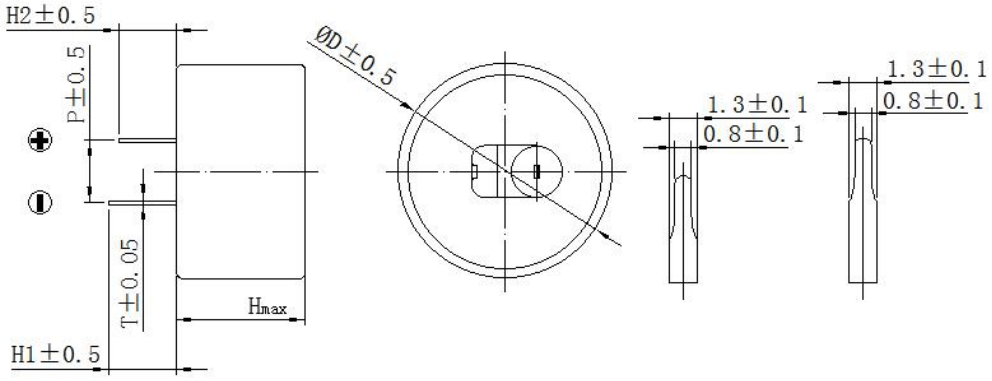

Size (ΦD×H)	Lead distance (P)	Positive lead length (h1)	Negative lead length (h2)	Lead thickness (T)
13×9.5	5	5.5	6	0.4

8. Packing :

Size of inner packing **(L×W×H)mm**	Size of outer packing **(L×W×H)mm**
265×190×90	400×281×236

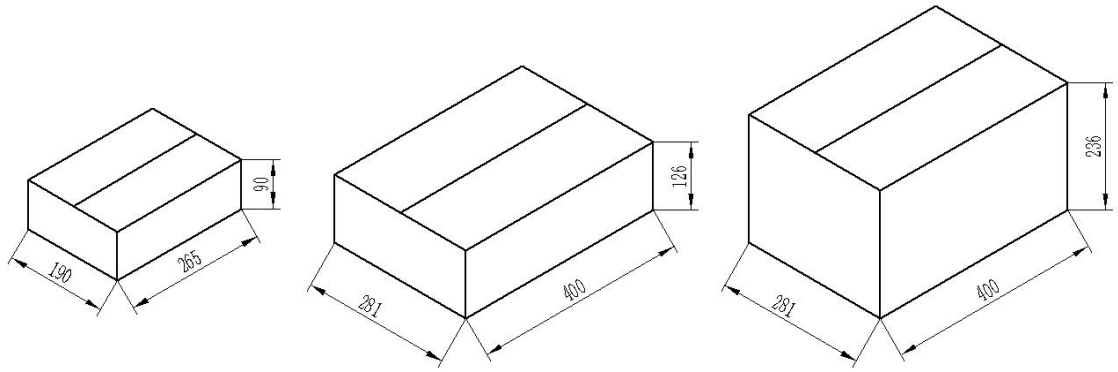

inner packing outer packing

Packing Schematic

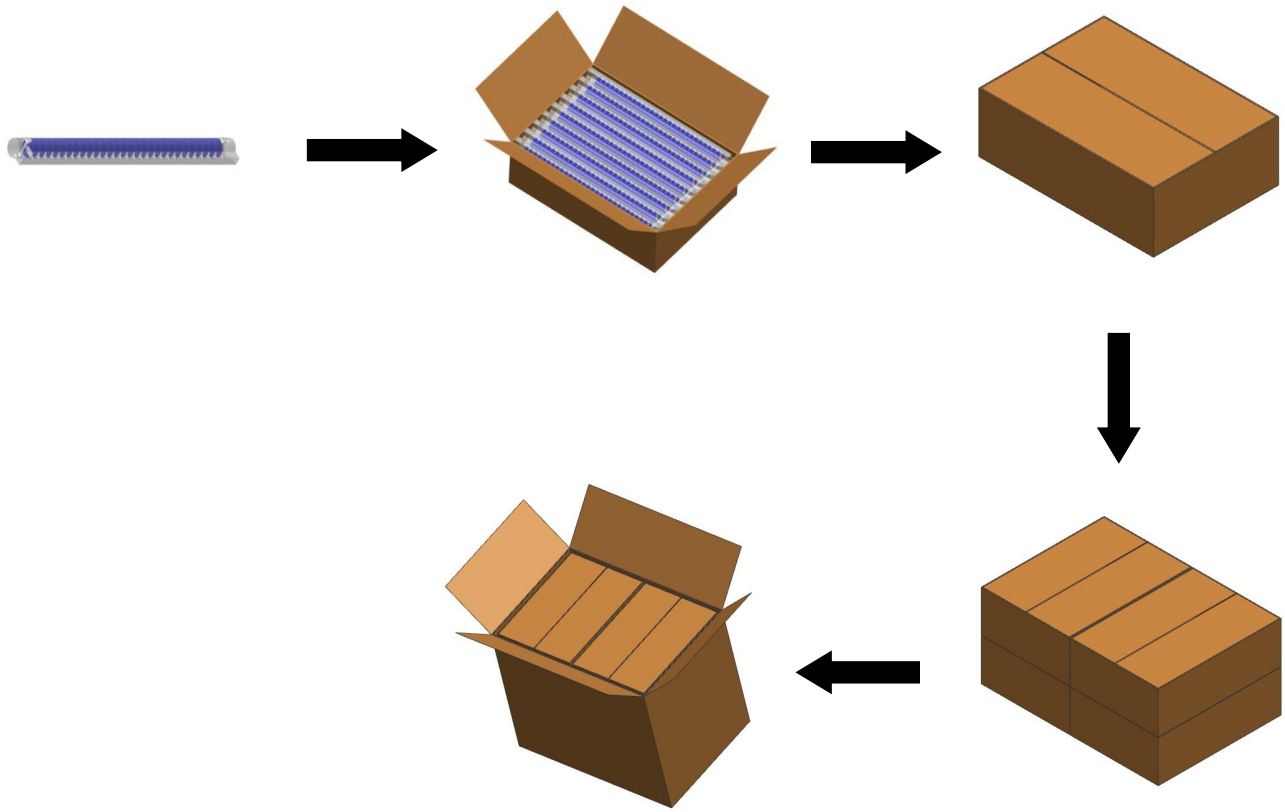

9. Performance testing method

9.1 According to the standard

QC/T 741-2014《Vehicle super capacitor》

Q/GDW 11845—2018《Technical specifications for supercapacitors for electric energy metering equipment》

DL/T 1652-2016《Technical specifications for supercapacitors for electric energy metering equipment》

9.2 capacity test

9.2.1 Measuring circuit

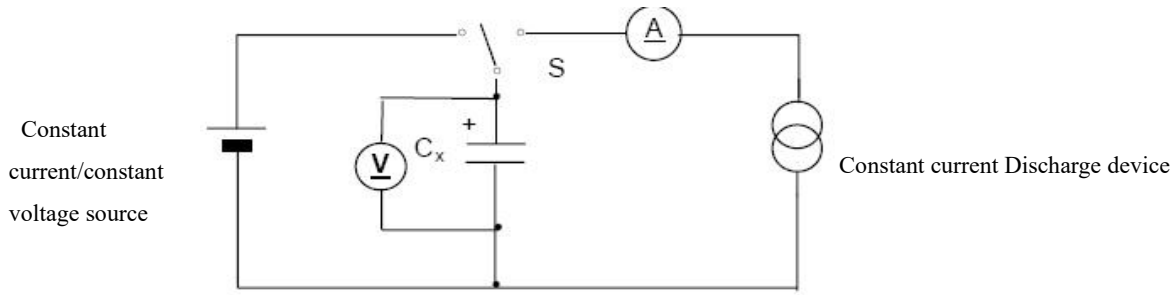

A	d.c. ammeter
V	d.c. voltmete
S	changeover switch
C_x	capacitor under test

Figure 1 − Circuit for constant current discharge method

9.2.2 measuring method

◎

Setting the direct current voltage of constant current/constant voltage power supply as rated voltage (UR)

◎

Setting the constant current value of the constant current discharge device , according to Table 2 specified.

◎

Turn the switch S to the d.c. power supply, and unless otherwise specified in the individual standards, apply voltage and charge for 30 min after the constant current/ constant voltage power supply has achieved the rated voltage.

◎

After charging for 30 min has finished, change over the switch S to the constant current discharge device , and discharge with a constant current.

◎

Unless otherwise specified in the individual standards, measure the time t1 and t2 where the voltage between capacitor terminals at the time of discharge reduces from U1 to U2 as shown in Figure 2, and calculate the capacitance value by the following formula:

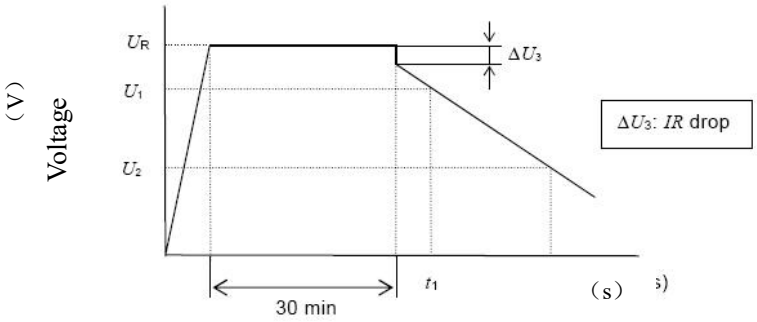

Figure 2 – Voltage characteristic between capacitor terminals

$$C = \frac{I \times (t_2 - t_1)}{U_1 - U_2}$$

C capacitance (F) ;

I discharge current (A) ;

U_1 measurement starting voltage (V) ;

U_2 measurement end voltage (V) ;

t_1 the time from discharge start to reach U1 (s) ;

t_2 the time from discharge start to reach U2 (s) 。

Discharge current I and decrease in voltage of discharge voltage U1, U2 , according to table 1

Table 1 – Discharge conditions

Classification	**SE、HE、HT** Coin type product)	**SP、HP、HT、LR**	
Application	Energy storage	Instantaneous power, power	$I_1 \quad \frac{C_R \quad U_R}{3600}$
Charging time	30min	30min	
I (A)	$I \quad 5I_1$	$I \quad 40I_1$	
U1	80% of the charging voltage (0.8×UR)		
U2	50% of the charging voltage (0.5×UR)		

Remarks :

C_R is the nominal capacity of the supercapacitor in Farads (F);

U_R rated voltage in volts (V);

I is the charge and discharge test current in amps（A）;

$I_1$is a supercapacitor 1 times charge and discharge current in amps（A）

9.2.3 Equipmen :

A、 ARBIN super capacitor test system

B、 Linear DC stabilized voltage power supply

C、 Constant current discharging device

D、 Voltage recording device

9.3 AC internal resistance test

9.3.1 Measuring circuit

As shown in the measurement circuit for testing

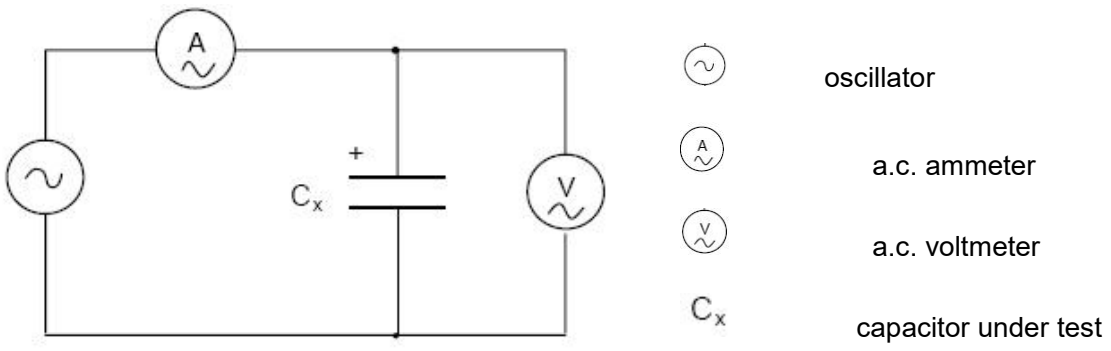

Figure 3–Circuit for a.c. resistance method

9.3.2 Measuring method

The internal resistance Ra of a capacitor shall be calculated by the following formula:

$$R_a = \frac{U}{I}$$

where

Ra a.c. internal resistance (Ω) ;

U the effective value of a.c. voltage (V r.m.s) ;

I the effective value of a.c. current (V r.m.s) 。

, **1kHz**。

The frequency of the measuring voltage shall be 1 kHz

The a.c. current shall be from 1 mA to 10 mA

9.3.3 equipment：

Internal resistance tester

10. Characteristic curve

(1) Leakage curve

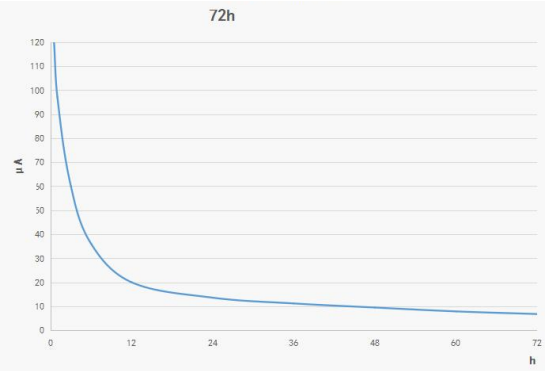

(2) temperature characteristics

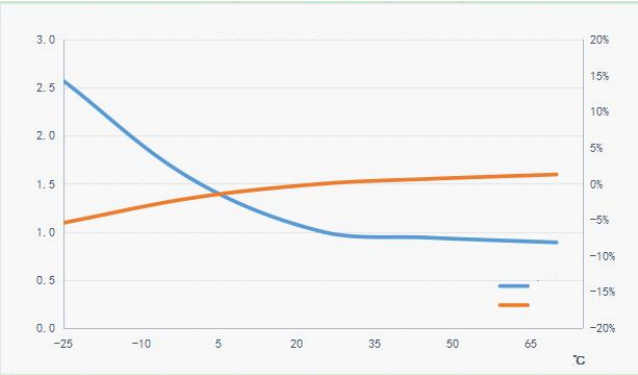

(3)

High temperature durability characteristic curve

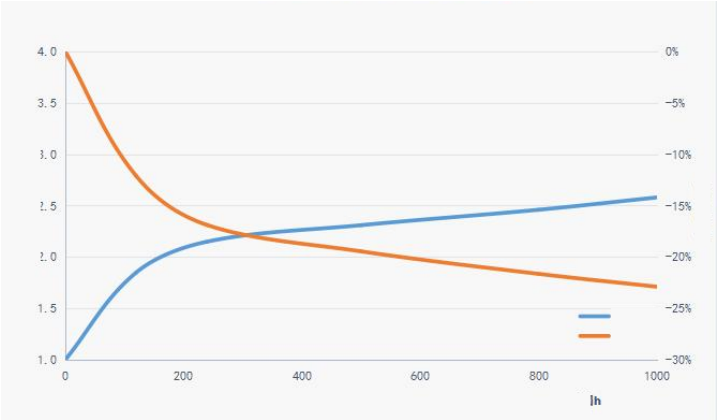

**The above curves are all trend curves, and the data of different models are different. If you have any requirements, please contact the technology.

11. Precautions for use

11.1

Supercapacitors cannot be used in the following states

a) temperature above the nominal temperature

When the temperature of the capacitor exceeds the nominal temperature, it will cause the electrolyte to decompose, and the capacitor will heat up and the capacity will drop.Moreover,

the internal resistance is increased and the life is shortened.

b) voltage exceeding the rated voltage

When the capacitor voltage exceeds the nominal voltage, it will cause the electrolyte to decompose, and the capacitor will heat up and the capacity will drop.Moreover, the internal resistance is increased and the life is shortened. Therefore, reducing the voltage used can increase the service life.

c) loading of reverse voltage or alternating voltage

11.2 Influence of ambient temperature on supercapacitors

The service life of supercapacitors is affected by the temperature of use. Under normal circumstances, the temperature of the supercapacitor is reduced by 10 °C, and the life of the supercapacitor is shortened by half. Try to use it in a low temperature environment below the maximum operating temperature. If it is used beyond the maximum operating temperature, the characteristics may deteriorate rapidly and be damaged.

The temperature of the supercapacitor should be determined not only by the temperature around the device, but also by the internal temperature. The radiant heat of the heating element (power transistor, resistor, etc.) in the device and the self-heating temperature caused by the ripple current are also confirmed. Also, do not install the heating element near the supercapacitor.

11.3

Please use the positive and negative signs of the capacitor correctly

11.4

Please avoid using super capacitors in the following environments.

a)

Environment where direct splashing water, salt water and oil are present, or in a dew condensation state, filled with gaseous oil or salt.

b)

An environment filled with harmful gases (hydrogen sulfide, sulfurous acid, chlorine,

ammonia, bromine, methyl bromide, etc.).

c)

An environment where acidic and alkaline solvents are splashed.

d)

Direct sunlight or dusty environment.

e)

An environment that is subject to excessive vibration and shock.

11.5

In the welding process to avoid overheating the capacitor (1.6mm printed circuit board, welding should be 260 ° C, the time does not exceed 5s).

11.6

Please avoid circuit wiring between the lead terminals of the supercapacitor or the solder joints of the connecting plates.

11.7

When the overvoltage and the operating temperature range exceed the rated conditions, the pressure valve may act and the electrolyte may be ejected. Therefore, please adopt a design method that has taken into account this abnormal condition.

11.8

In the case of rapid charge and discharge, a voltage drop due to internal impedance (also called IR drop) occurs at the start of charging and at the beginning of discharge. Therefore, use a design method that takes into account the magnitude of the voltage change.

11.9

Power type large-capacity products (about 10F or more) If the terminal is short-circuited during charging, there will be hundreds of amps of current flowing, which is dangerous. Please do not install or disassemble while charging.

11.10

Do not put the capacitor in the dissolved solder, only solder the solder on the guide pin of the capacitor. Do not allow the welding rod to contact the capacitor heat shrink tubing.

11.11

Do not forcibly twist or tilt the capacitor after installation.

11.12

When the supercapacitors are used in series, there is a voltage balance problem between the cells.

12. Saving request

12.1

Do not store in a place with a relative humidity greater than 85% or containing toxic gases and in a high temperature, high humidity environment. It is recommended to store in an environment with a temperature of -30℃~50℃ and a relative humidity of less than 60% for a long time.

12.2

Avoid preserving supercapacitors in the following environments

a)

Environment where direct splashing water, salt water and oil are present, or in a dew condensation state, filled with gaseous oil or salt.

b)

An environment filled with harmful gases (hydrogen sulfide, sulfurous acid, chlorine, ammonia, bromine, methyl bromide, etc.).

c)

An environment where acidic and alkaline solvents are splashed.

d)

Direct sunlight or dusty environment.

e)

An environment that is subject to excessive vibration and shock.

13. About discarding

Don't throw it away randomly. Follow the laws and regulations or local public organizations and other designated regulations, and hand over the waste to the industrial waste disposal company.

For other supercapacitor problems, please consult the manufacturer or refer to the relevant technical data of the supercapacitor instructions.