PRODUCT SPECIFICATION

Customer :

Part No. : HBA-3R8-J506F

Issue Date : 2022.01

Prepared	Checked	Approved
Customer Approval		

1. Scope:

This product specification specifies the performance and test methods of HBA series products as the basis for technical confirmation.

2. Typical Applications:

- Smart meters: smart electricity meters, smart water meters, smart gas meters
- Car electronics: car audio, ETC system, driving recorder
- Internet of Things 5G: smart TV, smart refrigerator, smart electronic door, anti-theft system, 5G terminal
- Back-up power supply: communication equipment, wireless transmission,RAM, UPS,small household appliances, small energy storage devices, green energy, solar street lights

3. Structure:

This product uses a cylindrical capacitor shape. The inside is a winding structure, the positive and negative electrode sheets are separated by a diaphragm, and are immersed in electrolyte components; the aluminum shell is sealed with a rubber plug, and the lead-out method is lead-out, and the lead-out pole is on the same side of the product.

4. General Specification:

Rated Voltage (V)	Rated Capacitance (F)	**ESR_{DC}** (mΩ)	**ESR_{AC}** (1KHz) (mΩ)	Rated Current (A)	Pulse Current (A)	Self Discharge (3months) (V)	Leakage Current (μA)	Weight (g)
3.8	50	600	200	0.28	1.4	3.0	7	2.3

6. Dimension:

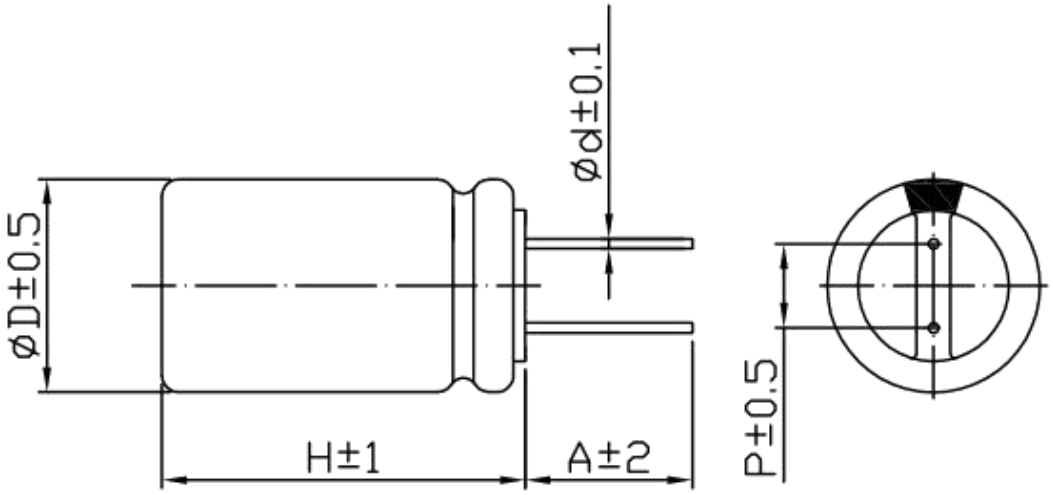

Product diameter ΦD (mm)	**Product Length** H (mm)	**Pin distance** P (mm)	**Pin diameter** Φd (mm)	**Pin length** A (mm)
8	24	3.5	0.6	10

7. Characteristics:

Items		Specification/Condition
01	Operating Voltage Range	2.5V~3.8V
02	Surge Voltage	4.2V
03	Cut-off discharge voltage	2.5V
04	Cap. Tolerance	-20%~+20%
05	Operating Temp.	-20℃~65℃ -20℃~85℃ (3.5V)
06	Cycle life Expectancy	250,000 cycles of charging and discharging experiments at room temperature. | △C/C | ≤30%, ESR≤2 times the specified value
07	High temperature load	+65℃ plus rated voltage, or +85℃ plus 3.5V voltage, after 1000h, | △C/C | ≤30%, ESR≤2 times the specified value
08	High temperature without load	+65℃, after 1000h | △C/C | ≤30%, ESR≤2 times the specified value
09	Temperature characteristics	+70℃, | △C/C | ≤50%, ESR≤ specified value - 20℃, | △C/C | ≤50%, ESR≤4 times the specified value
10	The steady state damp heat test	+40℃, 90--95%RH, 240h, | △C/C | ≤30%, ESR≤2 times the specified value

8. Packing:

Size of inner packing (L×W×H)mm	Size of outer packing (L×W×H)mm
265×190×90	400×281×336

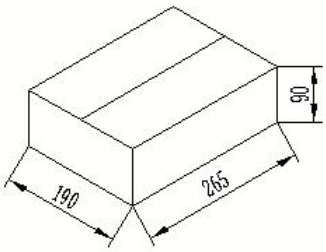

inner packing

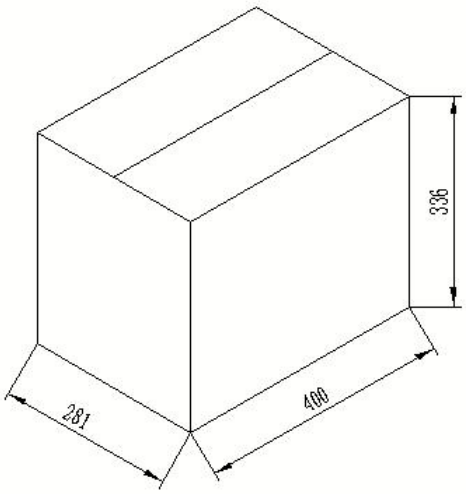

outer packing

Packing Schematic

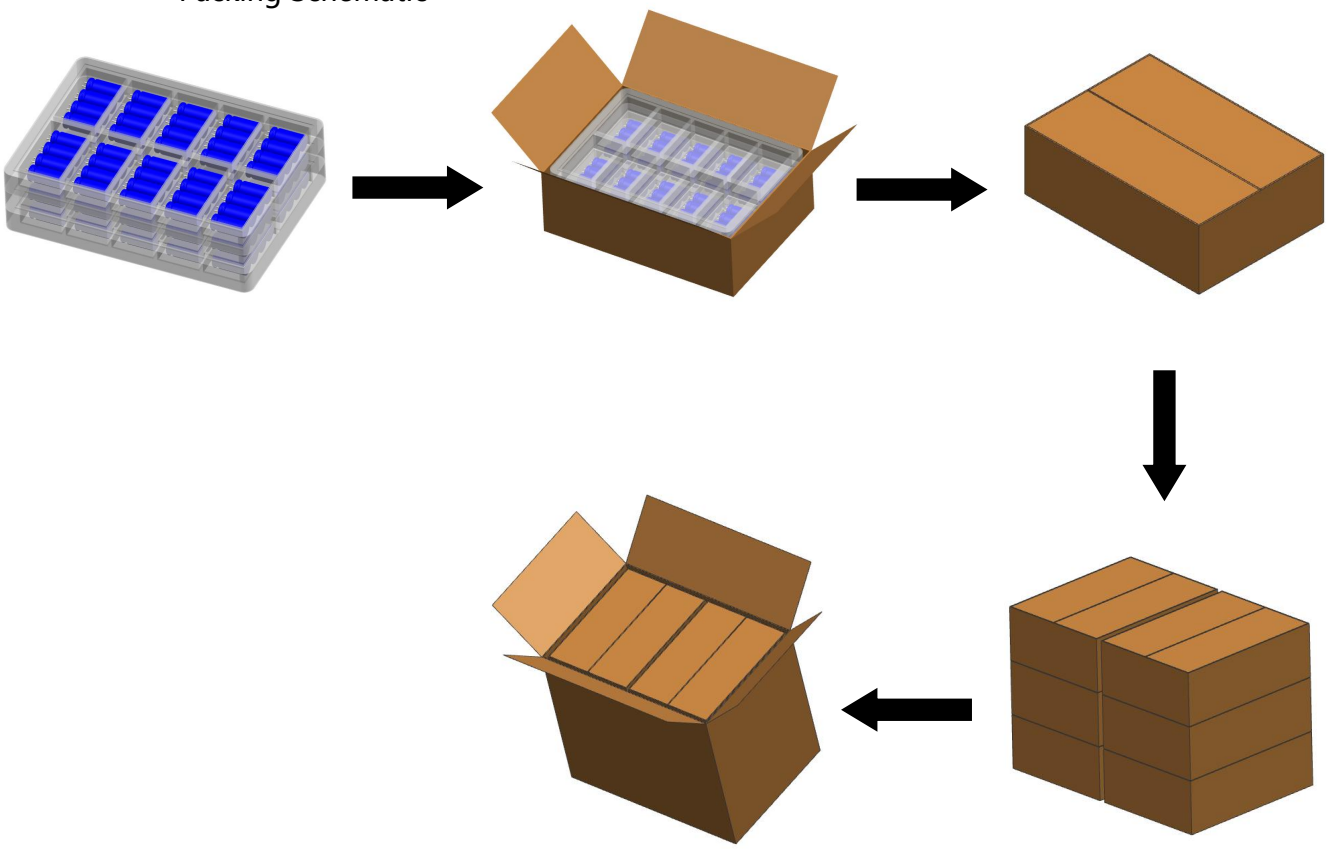

9. Test Methods:

9.1 Standard Test Condition

The standard test conditions in this specification are standard atmospheric pressure, temperature 25 ± 2 ℃, and relative humidity less than 60%.

9.2 capacitance

9.2.1 Test steps

a)

Charge the product with standard current and constant current IR to rated voltage U_R;

b)

Keep constant voltage charging at rated voltage U_R for 30min;

c)

Discharge with the standard current constant current IR to the termination voltage Umin, and record the time t1 and t2 of the voltage across the capacitor from U1 to U2.

The capacitance value is calculated according to the following equation:

$$C = \frac{I \times (t_2 - t_1)}{U_1 - U_2}$$

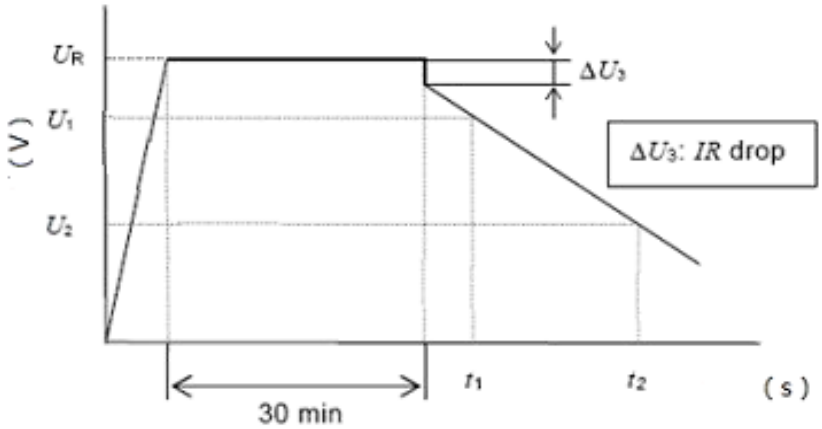

Figure 1 Capacity test curve

C capacity（F）；

I discharge current（A）；

U1 measures the initial voltage（V）；

U2 measurement termination voltage（V）；

t1 （s）；

t2 （s）。

9.2.2 Measuring circuit

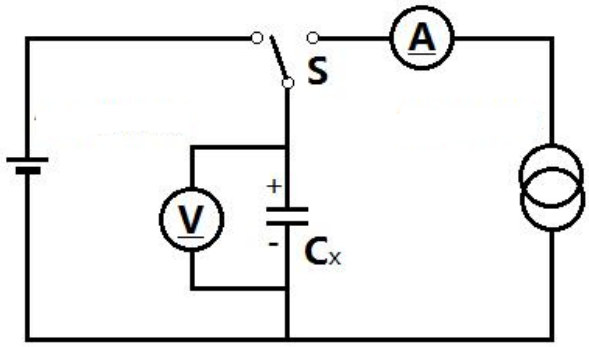

A DC ammeter

V DC voltmeter

S Changeover switch

Cx Capacitance to be measured

Figure 2 Constant current discharge method circuit

9.3 Internal resistance

9.3.1

Test method: AC impedance method

9.3.2 Measurement circuit

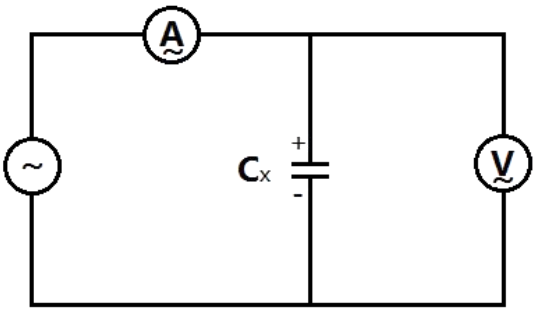

~ Oscillator

A AC ammeter

V AC voltmeter

Cx Capacitance to be measured

Figure 3 AC impedance method circuit

9.3.3 Calculation

The internal resistance Ra of the capacitor should be calculated by the following formula:

$$R_a = \frac{U}{I}$$

Among them

R_a AC internal resistance（Ω）;

U AC voltage effective value（V r.m.s）;

I RMS value of AC current（A r.m.s）。

The frequency of the measured voltage should be 1kHz.

The AC current should be 1mA to 10mA.

9.3.4 Device

Internal resistance tester

9.4 Cycle life Expectancy

a)

Charging: charge to the rated voltage U_R with the specified current I_a and constant current;

b) 10s;

Shelve: Shelve for 10s;

c)

Discharge: discharge at a constant current with the specified current I_a to the final voltage U_{min}

d)

Cycle: 250,000 cycles

9.5 Temperature characteristics

a)

Place the super capacitor at the corresponding test temperature (atmospheric environment) for 1 hour;

b)

Refer to method 8.2 for capacity test;

c)

Refer to method 8.3 for AC internal resistance test.

10. Precautions For Use:

10.1

Supercapacitors cannot be used under the following conditions. Otherwise, electrolyte decomposition and capacitor heating may occur, which will cause the pressure valve to operate, internal gas and electrolyte leakage; and electrical performance degradation such as reduced capacity and increased internal resistance, resulting in product life. Shorten or fail.

a) Exceeding the nominal temperature

The service life of a super capacitor is affected by the operating temperature. Generally, if the service temperature is increased by 10℃, the service life of the super capacitor will be shortened by half. Please try to use it in an environment lower than the maximum operating temperature. If it is used above the maximum operating temperature, it may cause rapid deterioration and breakage of the product's performance. The use temperature of supercapacitors must not only confirm the surrounding temperature and internal temperature of the equipment, but also confirm the radiated heat of the heating elements (power transistors, resistors, etc.) in the equipment, and the self-heating temperature caused by the ripple current. In addition, do not install the heating element near the capacitor.

b) Exceeding the rated voltage range

Please strictly follow the rated voltage range for charging and discharging. Excessive voltage exceeding the upper limit of the rated voltage during charging and too low voltage exceeding the

lower limit of the rated voltage during discharging will damage the performance of the capacitor, resulting in product performance degradation/invalidation, shortened life and damage. Therefore, please adopt a design solution that avoids overcharging and overdischarging.

c) Reverse voltage or AC voltage

Please use it strictly in accordance with the positive and negative signs. Reverse application of voltage may cause product performance degradation/failure, shortened life, and damage, or cause the pressure valve to operate, and internal gas and electrolyte leakage.

10.2

Avoid using super capacitors in the following environments.

a)

An environment where water, salt water, and oil are directly splashed, or an environment where condensation is present and filled with gaseous oil or salt.

b)

An environment full of harmful gases (hydrogen sulfide, sulfurous acid, chlorine, ammonia, bromine, methyl bromide, etc.).

c)

Environments splashed with acidic and alkaline solvents.

d)

The environment is exposed to direct sunlight or dust.

e)

An environment subject to excessive vibration and shock.

10.3

Avoid overheating the capacitor during the soldering process (for example, a 1.6mm printed circuit board, the soldering temperature should be 260°C, and the time should not exceed 5s).

10.4

Please avoid wiring the circuit between the lead poles of the super capacitor or between the

solder joints of the connecting board.

10.5

In the use of rapid charge and discharge, the voltage drop (also called IR drop) caused by the internal impedance will occur at the beginning of charging and at the beginning of discharge, so please adopt a design method that has considered the voltage variation range.

10.6

Do not put the capacitor in the dissolved solder, only stick the solder on the capacitor lead, and do not let the soldering rod touch the capacitor heat shrink tube.

10.7

When using in series, please consider the problem of voltage balance between cells in the design.

10.8

After installation, do not twist or tilt the capacitor forcibly, and do not drop the product or subject it to excessive shock or vibration.

10.9

This product has been charged to a certain voltage before shipment. Please do not short-circuit the positive lead (+) and negative lead (-) during use, do not let the leads of the product directly touch each other, and do not hold it directly with wet hands. Hold the positive and negative leads of the product. Otherwise, a large current discharge may occur, causing dangers such as electric shock and burns. The possible short-circuit situations include but are not limited to the following examples. Please avoid similar operations:

Avoid the following incorrect operation:

Do not touch the positive and negative clamps to each other during the test	Do not touch the positive and negative leads with tools at the same time when trimming
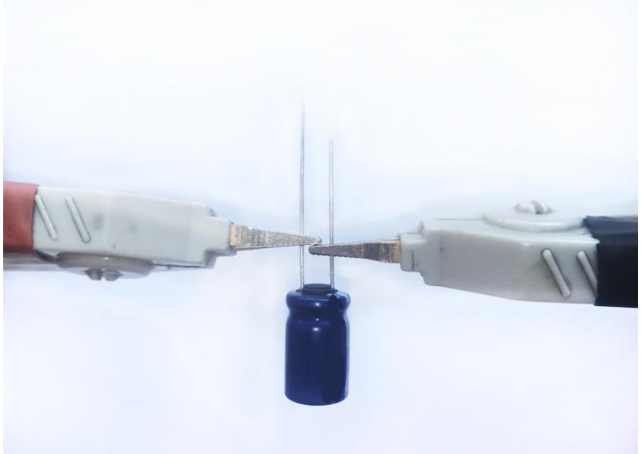	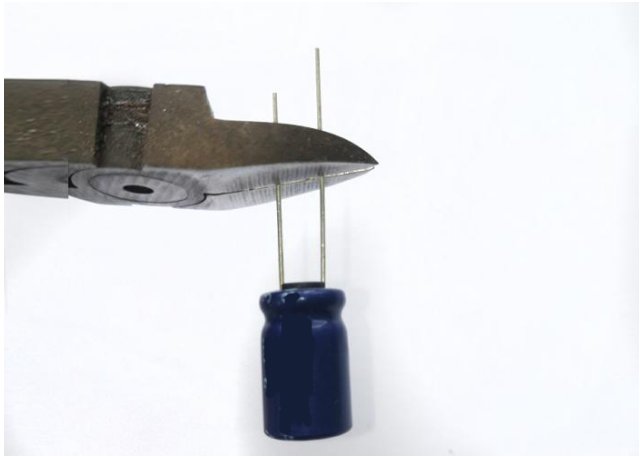
Do not touch the positive and negative leads with tools at the same time when welding	Do not touch the positive and negative leads with a tool at the same time when measuring
	
Do not touch the positive and negative leads of the product directly	Do not place products at random

	

11. Storage:

11.1

Do not store in a place where the relative humidity is greater than 85%RH, or contains toxic gases, or in a compound environment with high temperature and high humidity. It should be stored in an environment with a temperature of 10°C to 35°C and a relative humidity of less than 60%.

11.2

During long-term storage, do not make the voltage higher than its upper limit (3.8V) and lower than its lower limit (2.5V). It is recommended to charge the battery once every six months to prevent the product from over-discharging.

11.3

Avoid storing super capacitors in the following environments

a)

An environment where water, salt water, and oil are directly splashed, or an environment where condensation is present and filled with gaseous oil or salt.

b)

An environment full of harmful gases (hydrogen sulfide, sulfurous acid, chlorine, ammonia, bromine, methyl bromide, etc.).

c)

Environments splashed with acidic and alkaline solvents.

d)

The environment is exposed to direct sunlight or dust.

e)

An environment subject to excessive vibration and shock.

12. Disposal Considerations:

Don't throw it away randomly. Follow the laws and regulations or local public organizations and other designated regulations, and hand over the waste to the industrial waste disposal company.

13. Transport Information:

HBA series products are battery capacitor supercapacitors, which have been charged to a certain voltage when the products are shipped. The mode of transportation can be transported by vehicles, trains, ships and other means of transportation, according to the relevant transportation laws and regulations of lithium-ion batteries. Please pay attention to prevent rain, impact, drop, squeeze, etc. during transportation.

For other questions about super capacitors, please consult the manufacturer or refer to the relevant technical data in the instructions for use of super capacitors.