Film Capacitors

Metallized polyester film capacitor（Box-type）

Series/Type **MKT21**

Important notes

■ **Dimensions/Key Parameter Comparison Table** (UNIT:mm)

Item	Customer Number	Number	Rated Voltage	Rated Capacity	Voltage Discrancy	Encapsulation	Dimension						Figure
							W±0.5	H±0.5	T±0.5	P±0.5	d	L±0.5	
1	PIL2068	MKT21 104J400D2Z10	400VDC	104	J		13	11	5	10	0.6		2

■ **Key parts parameters, components, etc ：**

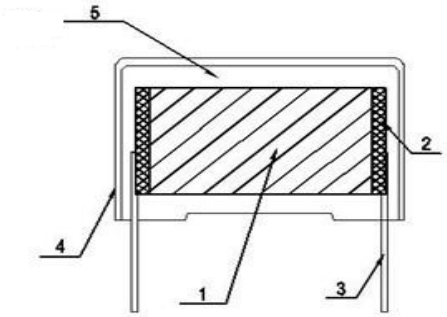

Item	Component Name	Material	Note
1	Capacitor core	Metallized polyester film	Specially treated
2	Electrode	Metal spraying layer	
3	Leading-out terminal	C CP line	
4	Case	PBT	UL94-V0
5	Filling resin	Epoxy resin	UL94-V0

Important notes

■ Outline Drawing

Figure 1

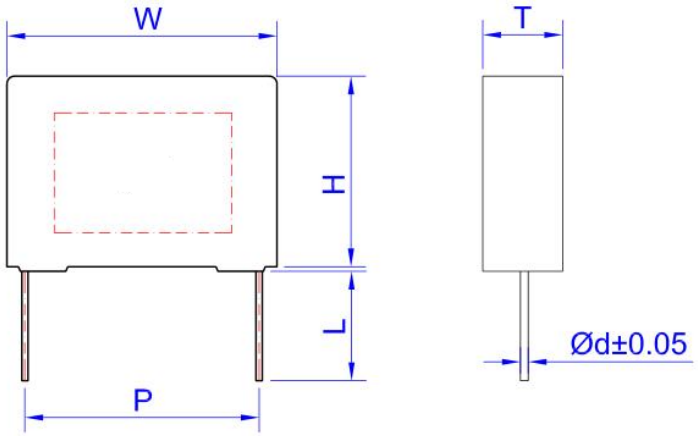

■ Identification

The contents are variable

Symbol	Instructions	Symbol	Instructions
	Brand	400V	Rated DC voltage
MKT21	号 Type	104J	Nominal capacitance and deviation

Important notes

Figure 2

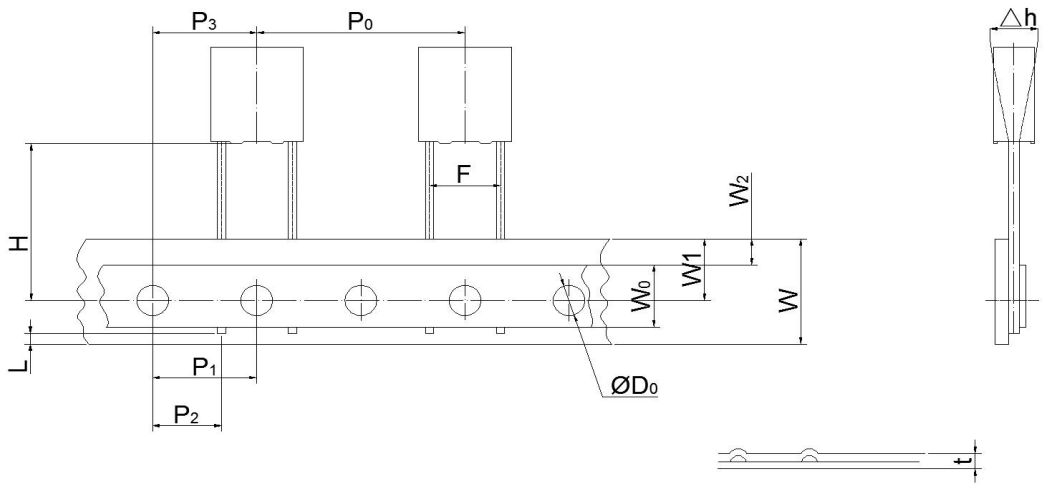

■ Braid size table（ mm）

Technical index name	Code	Dimension	
		P=10	Tolerance
Braid type	/	/	/
Capacitor spacing	P0	25.4	±1.0
Tape loading hole distance	P1	12.7	±0.3
Lead position	P2	7.7	±0.7
Capacitor body position	P3	12.7	±1.3
Lead spacing	F	10.0	+0.8/-0.2
Capacitor side tilt	△h	0	±2.0
Distance from capacitor bottom to hole center	H	18.5	±0.5
Bag width	W	18.0	+1/-0.5
Tape width	W0	10.0min	/
Tape loading hole location	W1	9.0	±0.5
Tape location	W2	3max	/
Tape loading hole diameter	D0	4.0	±0.2
Total braid thickness	t	0.7	±0.3
Distance from the lead line to the bottom of the paper bag	L	0min	/

Important notes

■ **Features**

- High reliability
- Metallozed polyester film,non-inductive wound construction
- Plastic case（UL94V_0），epoxy resin sealing

■ Trpical Applications

- By-passing，blocking，coupling，decoupling
- Puise，logic，timing，oscillator，circuits

■ Specifications

Reference Standard	GB/T 7332 （IEC 60384-2）					
Climatic Category	55/105/56					
Rated Temperature	85℃					
Operating Temperature Range	-55℃~105℃ （+85℃ to +105℃：decreasing factor 1.25% per ℃ for U_R）					
Rated Voltage	63V，100V，160V，250V，400V，630V，1000V					
Capacitance Range	0.0010μF~47μF					
Capacitance Tolerance	±5%（J），±10%（K），±20%（M）					
Voltage Proof	1.6U_R（5S）					
Dissipation Factor	≤1.0%（1kHz, 20℃）					
nsulation Resistance	U_R≤100V	R≥3750MΩ，Cn≤0.33μF RCn≥1250s，Cn>0.33μF （20℃，100V，1min）				
	U_R>100V	R≥30000MΩ，Cn≤0.33μF RCn≥10000s，Cn>0.33μF （20℃，100V，1min）				
If the working voltage（U）is lower than the rated voltage（U_R）,the capacitor can be worked at a higher dv/dt,Inthis case,the maximum allowed dv/dt is obtain by multiplying the right value with U_R/U.	U_R(V)	dv/dt(V/μs)				
		P=7.5	P=10.0	P=15.0	P=22.5	P=27.5
	63	7.5	6	3	2	1
	100	15	9	5	3	2
	250	30	20	12	8	5
	400	40	30	20	10	7
	6300	50	40	25	12	10
	1000	70	60	30	15	12

Important notes

■ Test Method And Performance

No.	Item	Performance	Test method(GB2693-2001)
1	Solderability	After solderability, good quality of tinning, there shall no continuous part of uncoated	Solder temperature: 235˚C±5˚C Immersion time: 2.0s±0.5s
2	Terminal strength	There shall be no visible damage	Tense: 0.50≤d≤0.80, 10N 0.80＜d≤1.25, 20N
3	Resistance to solder heat	There shall be no visible damage ΔC/C：≤2% (relative to the initial value) Increase of tgδ：C_R≤1μF ≤0.003 (10kHz)	Solder temperature:260˚C±5˚C Immersion time: 10s±0.5s
4	Initial measurement	Capacitance tgδ C_R≤1μF：Test frequency， 10kHz	
	Rapid change of temperature	There shall be no evidence of deterioration.	θ_A=-55˚C, θ_B =+105˚C 5 cycles Duration: t=30min
	Vibration	There shall be no evidence of deterioration.	Amplitude 0.75mm or acceleration 98m/s^2 (whichever is the smaller severity), f:10Hz to 500Hz.Three perpendicular directions, 2h for each direction, total 6h.
	Bump	There shall be no evidence of deterioration.	4000 times,Acceleration:390m/s2, Pulse duration,6ms

Important notes

	Final measurement	There shall be no visible damage ΔC/C：≤5% (relative to the initial value) Increase of tgδ：C_R≤1μF ≤0.003 (10kHz) C_R>1μF ≤0.002 (1kHz) IR: ≥50% of the rated value		
5	climate sequence	Initial measureme		
		Dry heat		+105℃, 16h
		Damp heat, Cyclic		Test Db, he first cycle
		Cold		-55℃, 2h
		Low air pressure	There shall be no permanent breakdown, flashover or other harmful deformation.	8.5kPa（85mbar）, 1h
		Damp heat, cyclic other		Test Db, the other cycles
		Final measureme nt	There shall be no visible damage, legible marking ΔC/C ≤5% (relative to the initial value) Increase of tgδ： C_R≤1μF ≤0.005 (10kHz) C_R>1μF ≤0.003 (1kHz) IR: ≥50%of the rated value	

Important notes

6	Damp heat steady state	There shall be no visible damage, legible marking ΔC/C ≤5% (relative to the initial value) Increase of tgδ: C_R≤1μF ≤0.005 (10kHz) C_R>1μF ≤0.005 (1kHz)	Temperature:40˚C±2˚C Humidity: 93±$^{2}_{3}$ %RH Duration: 21days
7	Endurance	There shall be no visible damage, legible marking ΔC/C≤5%(relative to the initial value) Increase of tgδ: C_R≤1μF ≤0.003 (10kHz) C_R>1μF ≤0.002 (1kHz) I.R: ≥50% of the rated value	T=85℃，1000h,Applied Voltage: 1.25×U_R T=105℃，1000h,Applied Voltage: 1.25×U_C
8	Charging and discharging	ΔC/C≤3% (relative to the initial value) Increase of tgδ：C_R≤1μF≤0.003 (10kHz) C_R>1μF≤0.002 (1kHz) I.R.: ≥50% of the rated value	Times: 10000 Duration of charging: 0.5s Duration of discharging: 0.5s Charging voltage: U_R

Important notes

■ Quality ensuring test (before shipment)

Inspection item（each batch）	Inspection level （GB 2828）	
	IL	AQL
Appearance inspection	S-4	1.5
Dimensions		
Capacitance	II	0.04
Tangent of the loss angle		
Dielectric strength		
Insulation resistance		
Solderability	S-3	2.5

Important notes

■ Packaging：

A certain quantity of capacitors and the qualified bill shall be packed with a plastic bag . Then put several plastic bags into one small packing box, sealed with adhesive paper. One big packing box Several small packing casesl packing box. Packing with small or big box depends on the customer's purchase quantity.

2

Film capacitance for molding tape packaging can also be carried out.

3

Packing cases with film capacitors are allowed to be transported by any means provided that direct rain or snow and mechanical damage are avoided.

■ Box size (variable)

1.

Inner packing boxes in bulk

(L355/B175/H118 ±10mm)

Outer packing box size

(L375/B375/H265 ±10mm)

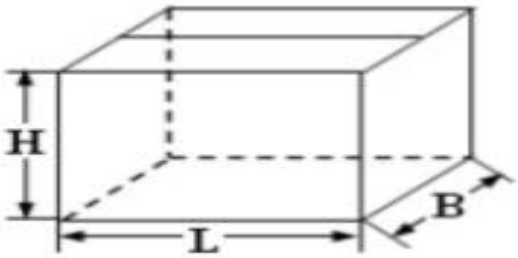

2.

Dimensions of radial braided packing box

(L330/B48/H320 ±10mm)

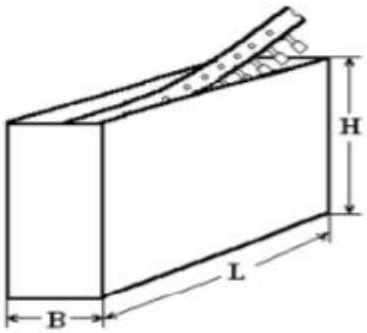

Outer packing box size

(L540/B340/H335 ±10mm)

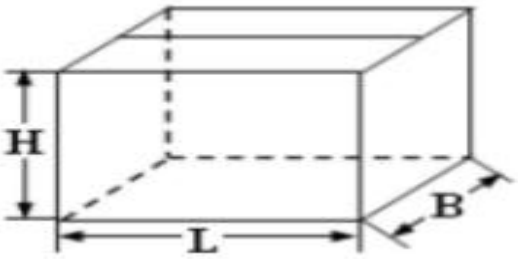

■ Environmental requirement

Compliance with RoHS and REACH requirements.