Metallized Polypropylene X2 Film Capacitor

Primary characteristics		
Parameter	**Value**	**Unit**
Capacitance	220	nF
Rated voltage	310	VAC

Features

- Pb-free and **RoHS** compliant
- Plastic case according to UL94V-0
- Good self-healing effect

Case dimensions

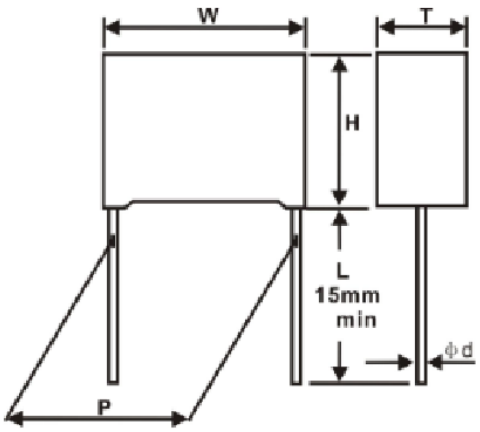

Unit	W	H	T	P	ϕd	L
mm	18 ±1.0	12 ±1.0	6.0 ±1.0	10 ±1.0	0.8 ±0.05	25 MIN

Part numbering system

AFC	X2	224	K		1		06P		25	L	B	
Series code	Type: X2	Capacitance 22pF x 10^4 = 220nF	Capacitane tolerance		Rated voltage marking		Lead width		Lead length	Lead configuration	Packing	
			J	±5%	1	310V	01P	2.5mm	25mm	See: lead configuration below	B	Bulk
			K	±10%			02P	5.0mm			T	Tape
			M	±20%			03P	7.5mm				
							nP	n x 2.5mm				

Lead configuration

Lead type	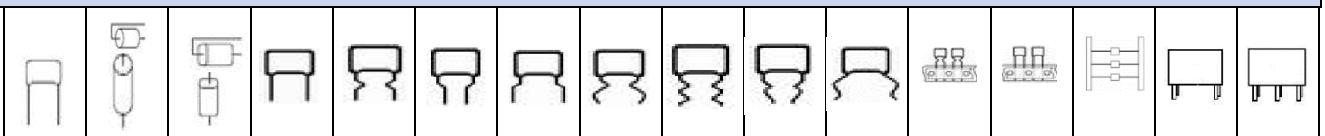															
Code	L	M	N	B	C	D	E	F	G	H	K	T	U	W	R	S

Specifications			
Parameter		**Value**	**Unit**
Operating temperature range		-40 ~ 110	°C
Climatic category		40/110/56/B	
Standard capacitance (C_R)		220	nF
Capacitance tolerance		±10	%
Rated voltage		310	VAC
Insulation resistance @60±5 sec.; @100VDC	≤0.33µF	≥15000	MΩ
	>0.33 µF	≥5000	

Ordering information			
Part Number	**Package**	**Shipping Quantity**	**Box dimensions**
AFCX2 224K106P25LB	18 x 12 x 6.0mm	**500 pcs/polybag**	---

Disclaimer

Akyga passive reserves the right to make changes without notice to any product specification herein, to make corrections, modifications, enhancements or other changes. Akyga passive or anyone on its behalf assumes no responsibility or liability for any errors or inaccuracies. Data sheet specifications and its information contained are intended to provide a product description only. "Typical" parameters which may be included on Akyga passive data sheets and/ or specifications can and do vary in different applications and actual performance may vary over time. Akyga passive does not assume any liability arising out of the application or use of any product or circuit. Akyga passive products are not designed, intended or authorized for use in medical, life-saving implant or other applications intended for life-sustaining or other related applications where a failure or malfunction of component or circuitry may directly or indirectly cause injury or threaten a life without expressed written approval of Akyga passive. Customers using or selling Akyga passive components for use in such applications do so at their own risk and shall agree to fully indemnify Akyga passive and its subsidiaries harmless against all claims, damages and expenditures.