EMC Test Report

For

Applicant Name:	**Ropla Elektronik sp. z o.o.**
Address:	Wrocławska 1C, 52-200 Suchy Dwór
EUT Name:	Lithium-Polymer Battery
Brand Name:	N/A
Model Number:	LP802059

Issued By

Company Name:	**BTF Testing Lab (Shenzhen) Co., Ltd.**
Address:	F101, 201 and 301, Building 1, Block 2, Tantou Industrial Park, Tantou Community, Songgang Street, Bao'an District, Shenzhen, China
Report Number:	BTF231204E00501
Test Standards:	EN IEC 61000-6-3:2021 EN IEC 61000-6-1:2019
Test Conclusion:	Pass
Test Date:	2023-12-04 to 2023-12-06
Date of Issue:	2023-01-08
Prepared By:	Gavin Cui / Project Engineer
Date:	2023-01-08
Approved By:	Ryan.CJ / EMC Manager
Date:	2023-01-08

Note: All the test results in this report only related to the testing samples. Which can be duplicated completely for the legal use with approval of applicant; it shall not be reproduced except in full without the written approval of BTF Testing Lab (Shenzhen) Co., Ltd., All the objections should be raised within thirty days from the date of issue. To validate the report, you can contact us.

BTF Testing Lab (Shenzhen) Co., Ltd.
F101, 201 and 301, Building 1, Block 2, Tantou Industrial Park, Tantou Community, Songgang Street, Bao'an District, Shenzhen, China

Revision History		
Version	Issue Date	Revisions Content
R_V0	2023-12-06	Original
Note: Once the revision has been made, then previous versions reports are invalid.		

BTF Testing Lab (Shenzhen) Co., Ltd.
F101, 201 and 301, Building 1, Block 2, Tantou Industrial Park, Tantou Community, Songgang Street, Bao'an District, Shenzhen, China

Table of Contents

BTF Testing Lab (Shenzhen) Co., Ltd.
F101, 201 and 301, Building 1, Block 2, Tantou Industrial Park, Tantou Community, Songgang Street, Bao'an District, Shenzhen, China

1 Introduction

1.1 Identification of Testing Laboratory

Company Name:	BTF Testing Lab (Shenzhen) Co., Ltd.
Address:	F101, 201 and 301, Building 1, Block 2, Tantou Industrial Park, Tantou Community, Songgang Street, Bao'an District, Shenzhen, China
Phone Number:	+86-0755-23146130
Fax Number:	+86-0755-23146130

1.2 Identification of the Responsible Testing Location

Company Name:	BTF Testing Lab (Shenzhen) Co., Ltd.
Address:	F101, 201 and 301, Building 1, Block 2, Tantou Industrial Park, Tantou Community, Songgang Street, Bao'an District, Shenzhen, China
Phone Number:	+86-0755-23146130
Fax Number:	+86-0755-23146130

1.3 Announcement

(1) The test report reference to the report template version v0.
(2) The test report is invalid if not marked with the signatures of the persons responsible for preparing, reviewing and approving the test report.
(3) The test report is invalid if there is any evidence and/or falsification.
(4) This document may not be altered or revised in any way unless done so by BTF and all revisions are duly noted in the revisions section.
(5) Content of the test report, in part or in full, cannot be used for publicity and/or promotional purposes without prior written approval from the laboratory.
(6) The laboratory is only responsible for the data released by the laboratory, except for the part provided by the applicant.

2 Product Information

2.1 Application Information

Company Name:	Ropla Elektronik sp. z o.o.
Address:	Wrocławska 1C, 52-200 Suchy Dwór

2.2 Manufacturer Information

Company Name:	Ropla Elektronik sp. z o.o.
Address:	Wrocławska 1C, 52-200 Suchy Dwór

2.3 Factory Information

Company Name:	Ropla Elektronik sp. z o.o.
Address:	Wrocławska 1C, 52-200 Suchy Dwór

2.4 General Description of Equipment under Test (EUT)

EUT Name:	Lithium-Polymer Battery
Test Model Number:	LP802059

2.5 Technical Information

Power Supply:	battery powered

BTF Testing Lab (Shenzhen) Co., Ltd.
F101, 201 and 301, Building 1, Block 2, Tantou Industrial Park, Tantou Community, Songgang Street, Bao'an District, Shenzhen, China

3 Summary of Test Results

3.1 Test Standards

The tests were performed according to following standards:
EN IEC 61000-6-3:2021: Electromagnetic compatibility (EMC) - Part 6-3: Generic standards - Emission standard for equipment in residential environments
EN IEC 61000-6-1:2019: Electromagnetic compatibility (EMC) - Part 6-1: Generic standards - Immunity standard for residential, commercial and light-industrial environments

3.2 Uncertainty of Test

Item	Measurement Uncertainty
Radiated Emissions (30M - 1GHz)	±4.12dB
The following measurement uncertainty levels have been estimated for tests performed on the EUT as specified in CISPR 16-4-2. This uncertainty represents an expanded uncertainty expressed at approximately the 95% confidence level using a coverage factor of k=2.	

3.3 Summary of Test Result

Item	Standard	Requirement	Result
Radiation disturbance (30MHz-1GHz)	EN IEC 61000-6-3:2021	Table 3	Pass
Electrostatic discharge	EN IEC 61000-6-1:2019	Table 1.4	Pass
Radio-frequency electromagnetic field	EN IEC 61000-6-1:2019	Table 1.2 & 1.3	Pass

BTF Testing Lab (Shenzhen) Co., Ltd.
F101, 201 and 301, Building 1, Block 2, Tantou Industrial Park, Tantou Community, Songgang Street, Bao'an District, Shenzhen, China

4 Test Configuration

4.1 Test Equipment List

Radiation disturbance (30MHz-1GHz)					
Equipment	**Manufacturer**	**Model No**	**Inventory No**	**Cal Date**	**Cal Due Date**
Coaxial cable Multiflex 141	Schwarzbeck	N/SMA 0.5m	517386	2023-03-24	2024-03-23
Preamplifier	SCHWARZBECK	BBV9744	00246	/	/
RE Cable	REBES Talent	UF1-SMASMAM-10m	21101566	/	/
RE Cable	REBES Talent	UF2-NMNM-10m	21101570	/	/
RE Cable	REBES Talent	UF1-SMASMAM-1m	21101568	/	/
RE Cable	REBES Talent	UF2-NMNM-1m	21101576	/	/
RE Cable	REBES Talent	UF2-NMNM-2.5m	21101573	/	/
POSITIONAL CONTROLLER	SKET	PCI-GPIB	/	/	/
Horn Antenna	SCHWARZBECK	BBHA9170	01157	2023-11-13	2024-11-12
EMI TEST RECEIVER	ROHDE&SCHWARZ	ESCI7	101032	2023-11-16	2024-11-15
SIGNAL ANALYZER	ROHDE&SCHWARZ	FSQ40	100010	2023-11-16	2024-11-15
POSITIONAL CONTROLLER	SKET	PCI-GPIB	/	/	/
Broadband Preamplilifier	SCHWARZBECK	BBV9718D	00008	2023-03-24	2024-03-23
Horn Antenna	SCHWARZBECK	BBHA9120D	2597	2022-05-22	2024-05-21
EZ_EMC	Frad	FA-03A2 RE+	/	/	/
POSITIONAL CONTROLLER	SKET	PCI-GPIB	/	/	/
Log periodic antenna	SCHWARZBECK	VULB 9168	01328	2023-11-13	2024-11-12

Electrostatic discharge					
Equipment	**Manufacturer**	**Model No**	**Inventory No**	**Cal Date**	**Cal Due Date**
ESD Generator	Prima	PESD6030	PR210823683	2023-11-16	2024-11-15

Radio-frequency electromagnetic field					
Equipment	**Manufacturer**	**Model No**	**Inventory No**	**Cal Date**	**Cal Due Date**
Field Probe	Narda	EP-601	811ZX01057	2023-07-03	2024-07-02
Antenna	SKET	STLP9129_Plus	/	/	/
Amplifier	SKET	HAP_03G06G-80W	202004044	2023-07-03	2024-07-02
Amplifier	SKET	HAP_01G03G-75W	202104180	2023-07-03	2024-07-02
Amplifier	SKET	HAP_80M01G-250W	/	2023-02-24	2024-02-23
USB Power Sensor	Agilent	U2001A	MZ54330012	2023-02-24	2024-02-23
USB Power sensor	Agilent	U2000A	MY53410013	2023-02-24	2024-02-23
Signal Generator	Agilent	N5181A	MY50141997	2023-11-16	2024-11-15

BTF Testing Lab (Shenzhen) Co., Ltd.
F101, 201 and 301, Building 1, Block 2, Tantou Industrial Park, Tantou Community, Songgang Street, Bao'an District, Shenzhen, China

4.2 Test Auxiliary Equipment

Title	Manufacturer	Model No.	Serial No.
resistive load	/	/	/

4.3 Test Modes

No.	Test Modes	Description
TM1	Discharge	

BTF Testing Lab (Shenzhen) Co., Ltd.
F101, 201 and 301, Building 1, Block 2, Tantou Industrial Park, Tantou Community, Songgang Street, Bao'an District, Shenzhen, China

5 Emission Test Results (EMI)

5.1 Radiation disturbance (30MHz-1GHz)

Test Requirement:	Table 3
Test Method:	CISPR 16-2-3 Clause 7.3
Test Limit:	Frequency range / Limits at 10m / Limits at 3m 30 MHz to 230 MHz / 30 dB(uV/m) quasi-peak / 40 dB(uV/m) quasi-peak 230 MHz to 1 000 MHz / 37 dB(uV/m) quasi-peak / 47 dB(uV/m) quasi-peak At transitional frequencies the lower limit applies.
Procedure:	An initial pre-scan was performed in the chamber using the spectrum analyser in peak detection mode. Quasi-peak measurements were conducted based on the peak sweep graph. The EUT was measured by BiConiLog antenna with 2 orthogonal polarities. Level=Read Level + Antenna Factor + Cable Loss - Preamp Factor

5.1.1 E.U.T. Operation:

Operating Environment:	
Temperature:	24 °C
Humidity:	52 %
Atmospheric Pressure:	1010 mbar

5.1.2 Test Setup Diagram:

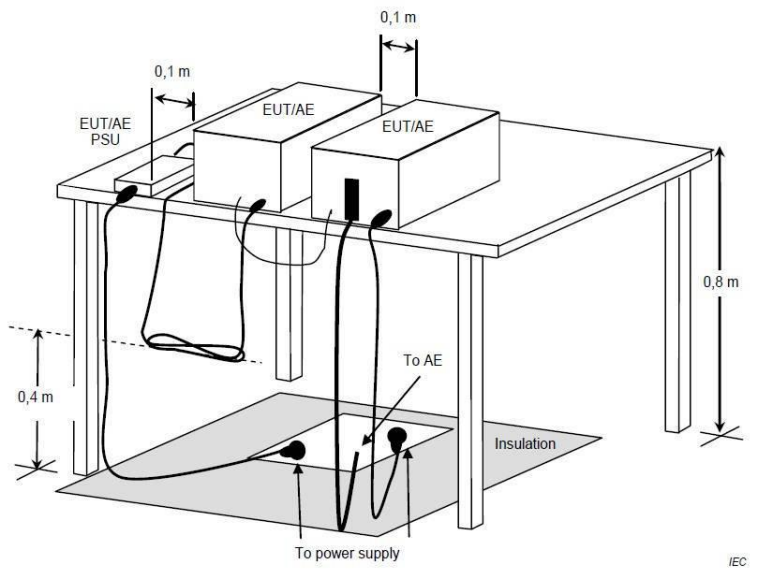

5.1.3 Test Data:

TM1 / Polarization: Horizontal

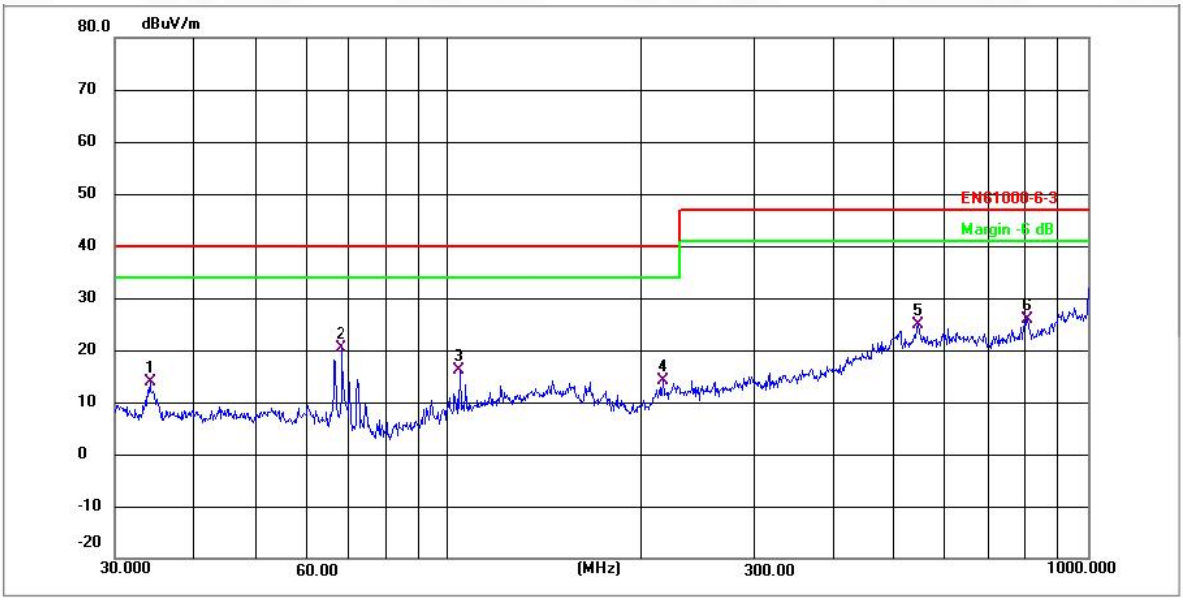

No.	Frequency (MHz)	Reading (dBuV)	Factor (dB/m)	Level (dBuV/m)	Limit (dBuV/m)	Margin (dB)	Detector	P/F
1	34.1561	32.28	-18.48	13.80	40.00	-26.20	QP	P
2 *	68.1514	38.45	-18.12	20.33	40.00	-19.67	QP	P
3	104.3529	30.65	-14.62	16.03	40.00	-23.97	QP	P
4	216.4031	30.90	-16.85	14.05	40.00	-25.95	QP	P
5	545.1826	36.74	-11.97	24.77	47.00	-22.23	QP	P
6	807.4291	49.55	-23.60	25.95	47.00	-21.05	QP	P

BTF Testing Lab (Shenzhen) Co., Ltd.
F101, 201 and 301, Building 1, Block 2, Tantou Industrial Park, Tantou Community, Songgang Street, Bao'an District, Shenzhen, China

TM1 / Polarization: Vertical

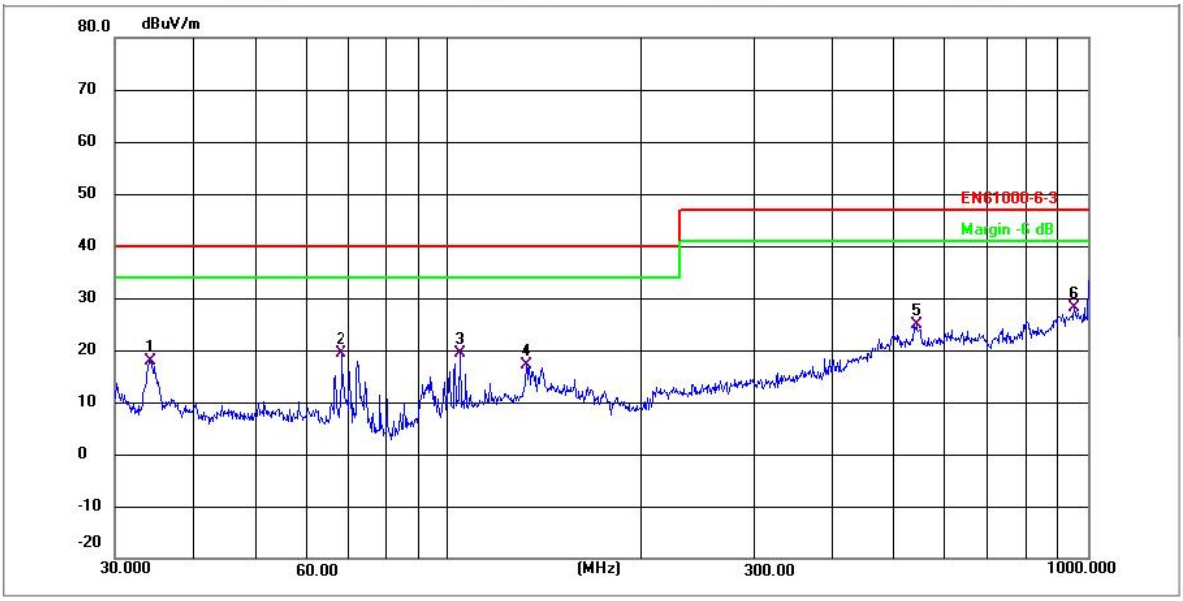

No.	Frequency (MHz)	Reading (dBuV)	Factor (dB/m)	Level (dBuV/m)	Limit (dBuV/m)	Margin (dB)	Detector	P/F
1	34.2160	38.58	-20.65	17.93	40.00	-22.07	QP	P
2	68.1514	39.37	-20.03	19.34	40.00	-20.66	QP	P
3	104.5361	33.06	-13.73	19.33	40.00	-20.67	QP	P
4	132.4526	31.12	-14.08	17.04	40.00	-22.96	QP	P
5	541.3725	36.32	-11.56	24.76	47.00	-22.24	QP	P
6 *	953.7645	49.89	-21.75	28.14	47.00	-18.86	QP	P

BTF Testing Lab (Shenzhen) Co., Ltd.
F101, 201 and 301, Building 1, Block 2, Tantou Industrial Park, Tantou Community, Songgang Street, Bao'an District, Shenzhen, China

6 Immunity Test Results (EMS)

Performance criteria A

The EUT shall continue to operate as intended during and after the test. No degradation of performance or loss of function is allowed below a performance level specified by the manufacturer, when the EUT is used as intended. If the performance level is not specified by the manufacturer, this may be derived from the product description and documentation and what the user may reasonably expect from the equipment if used as intended.

Performance criteria B

The EUT shall continue to operate as intended after the test. No degradation of performance or loss of function is allowed below a performance level specified by the manufacturer, when the EUT is used as intended. The performance level may be replaced by a permissible loss of performance. However, during the test degradation of performance is allowed but no change of actual operating state or stored data is allowed. If the minimum performance level or the permissible performance loss is not specified by the manufacturer, either of these may be derived from the product description and documentation and what the user may reasonably expect from the equipment if used as intended.

Performance criteria C

Temporary loss of function is allowed during the test, provided the function is self-recoverable or can be restored by the operation of the controls.

BTF Testing Lab (Shenzhen) Co., Ltd.
F101, 201 and 301, Building 1, Block 2, Tantou Industrial Park, Tantou Community, Songgang Street, Bao'an District, Shenzhen, China

6.1 Electrostatic discharge

Test Requirement:	Table 1.4
Test Method:	EN 61000-4-2: 2009
Procedure:	Discharge Impedance: 330 Ω / 150 pF Discharge Voltage: Air Discharge: 8 kV; Contact Discharge:4 kV; VCP/HCP: 4 kV. Polarity: Positive & Negative Number of Discharge: Minimum 10 times at each test point Discharge Mode: Single Discharge Discharge Period: 1 second minimum
Performance Criteria:	B

6.1.1 E.U.T. Operation:

Operating Environment:	
Temperature:	24 °C
Humidity:	51 %
Atmospheric Pressure:	1010 mbar

6.1.2 Test Setup Diagram:

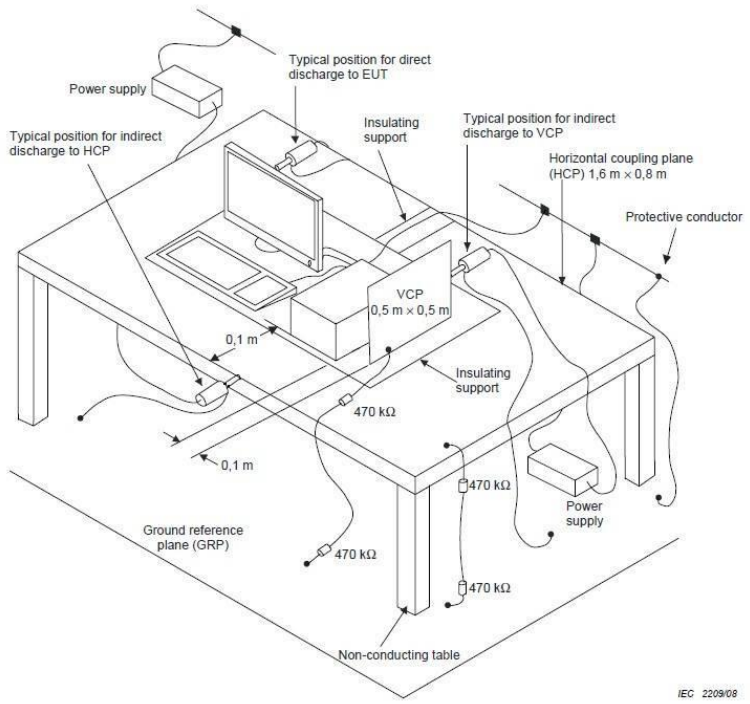

6.1.3 Test Data:

Discharge type	Volt (kV)	Polarity	Test Point	Result/ Observations
Air discharge	8	+	1	A
Air discharge	8	-	1	A
Contact discharge	4	+	2	N/A
Contact discharge	4	-	2	N/A
Horizontal Coupling	4	+	3	A
Horizontal Coupling	4	-	3	A
Vertical Coupling	4	+	3	A
Vertical Coupling	4	-	3	A

Test Point: 1. All insulated enclosure and seams.
2. All accessible metal parts of the enclosure.
3. All side.
A: No degradation in the performance of the EUT was observed.

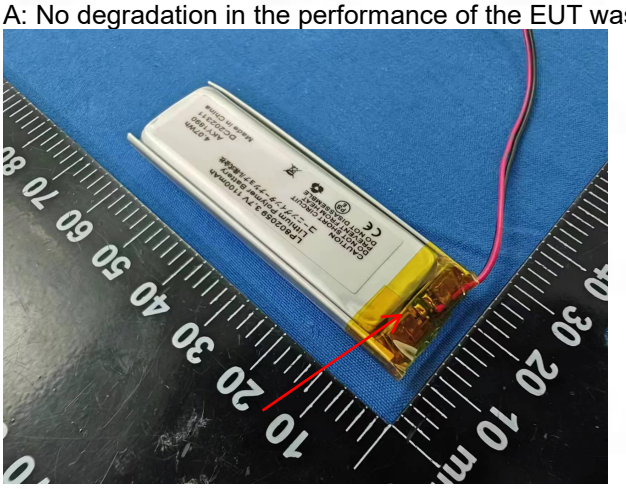

6.2 Radio-frequency electromagnetic field

Test Requirement:	Table 1.2 & 1.3
Test Method:	EN IEC 61000-4-3:2020
Procedure:	Antenna Polarisation: Vertical and Horizontal Modulation: 1kHz,80% Amp. Mod,1% increment Frequency Range: 80MHz to 1GHz, 1.4GHz to 6GHz
Performance Criteria:	A

6.2.1 E.U.T. Operation:

Operating Environment:	
Temperature:	24.2 °C
Humidity:	53 %
Atmospheric Pressure:	1010 mbar

6.2.2 Test Setup Diagram:

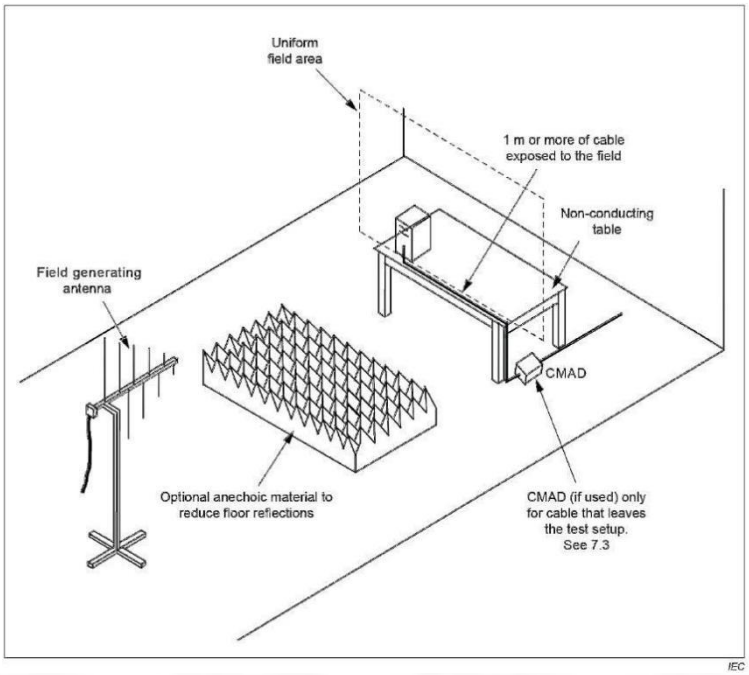

6.2.3 Test Data:

Frequency	Field Strength (V/m)	EUT face	Dwell time	Result/ Observations
80MHz-1GHz	3	Front	2s	A
80MHz-1GHz	3	Back	2s	A
80MHz-1GHz	3	Left	2s	A
80MHz-1GHz	3	Right	2s	A
80MHz-1GHz	3	Top	2s	A
80MHz-1GHz	3	Bottom	2s	A
1.4GHz-6GHz	3	Front	2s	A
1.4GHz-6GHz	3	Back	2s	A
1.4GHz-6GHz	3	Left	2s	A
1.4GHz-6GHz	3	Right	2s	A
1.4GHz-6GHz	3	Top	2s	A
1.4GHz-6GHz	3	Bottom	2s	A

A: No degradation in the performance of the EUT was observed.

BTF Testing Lab (Shenzhen) Co., Ltd.
F101, 201 and 301, Building 1, Block 2, Tantou Industrial Park, Tantou Community, Songgang Street, Bao'an District, Shenzhen, China

7 Test Setup Photos

Radiation disturbance (30MHz-1GHz)
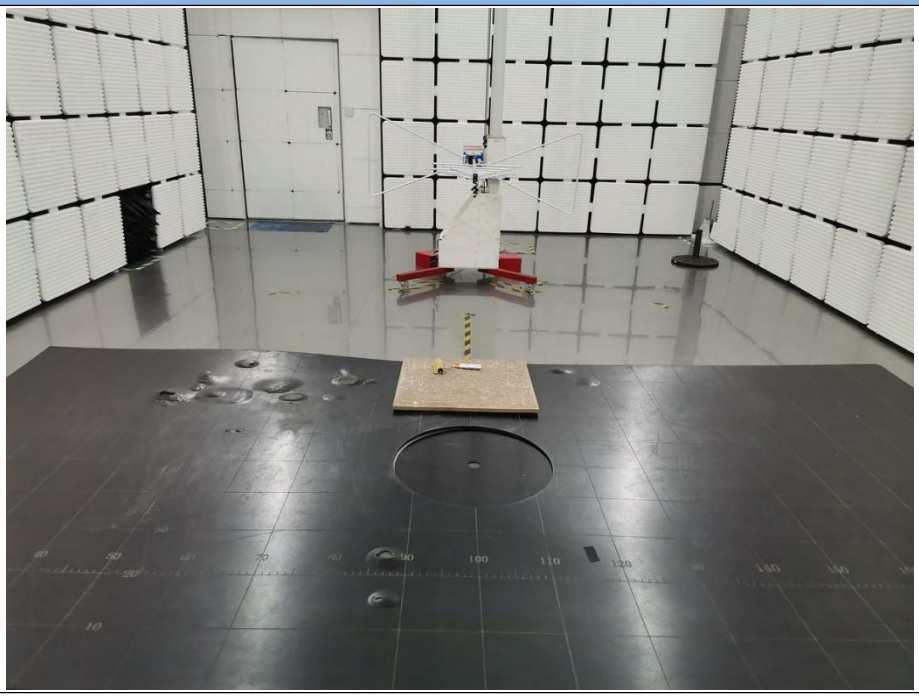

Electrostatic discharge
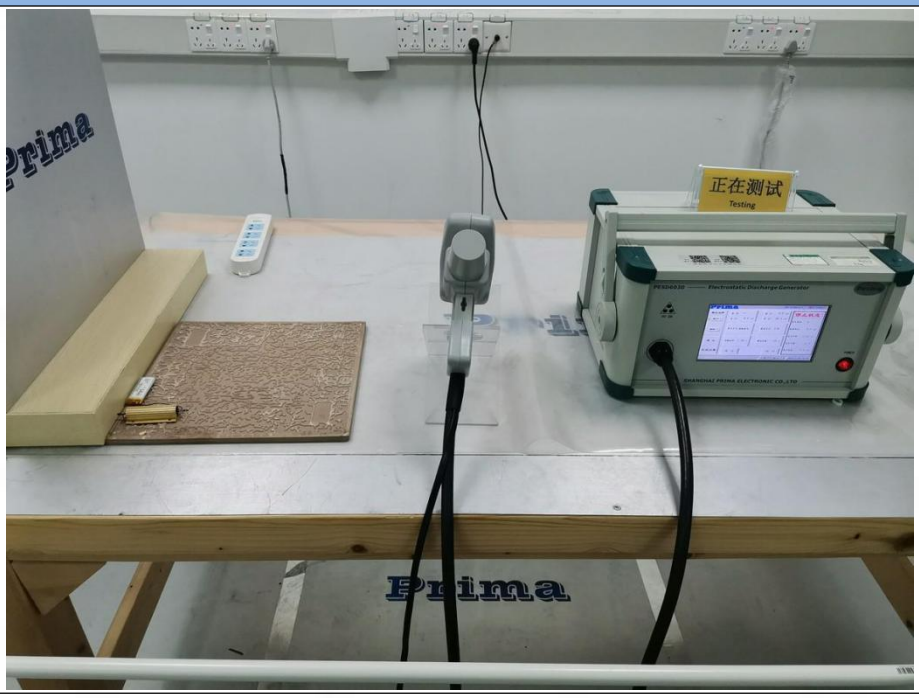

BTF Testing Lab (Shenzhen) Co., Ltd.
F101, 201 and 301, Building 1, Block 2, Tantou Industrial Park, Tantou Community, Songgang Street, Bao'an District, Shenzhen, China

8 EUT Constructional Details (EUT Photos)

External
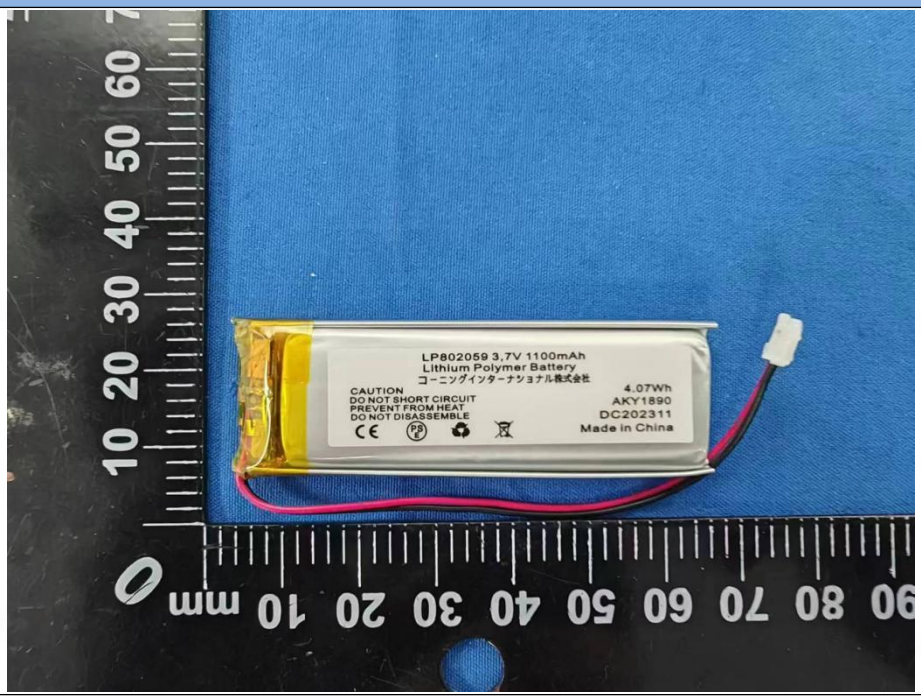
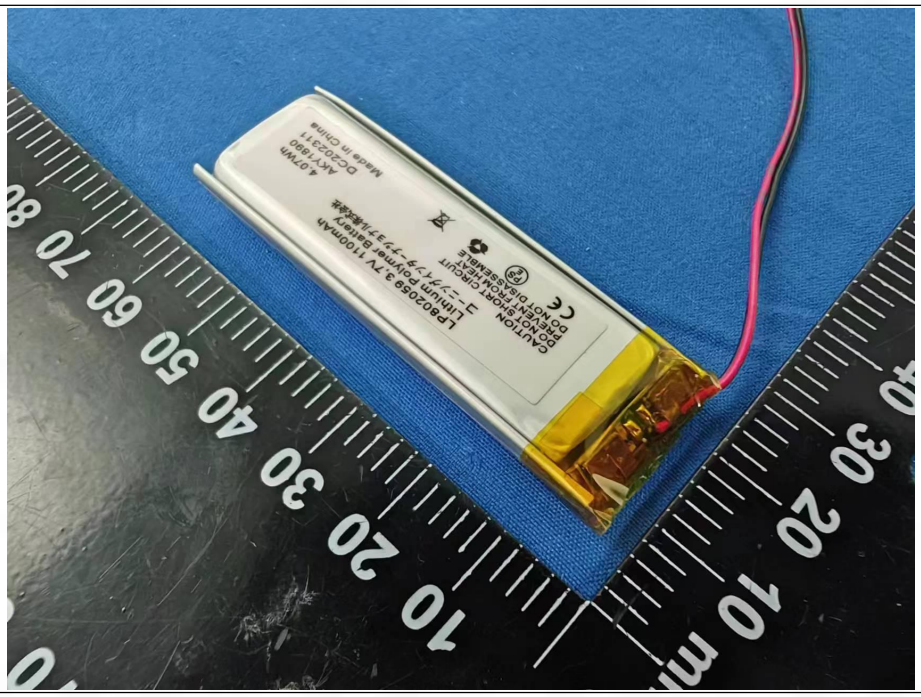

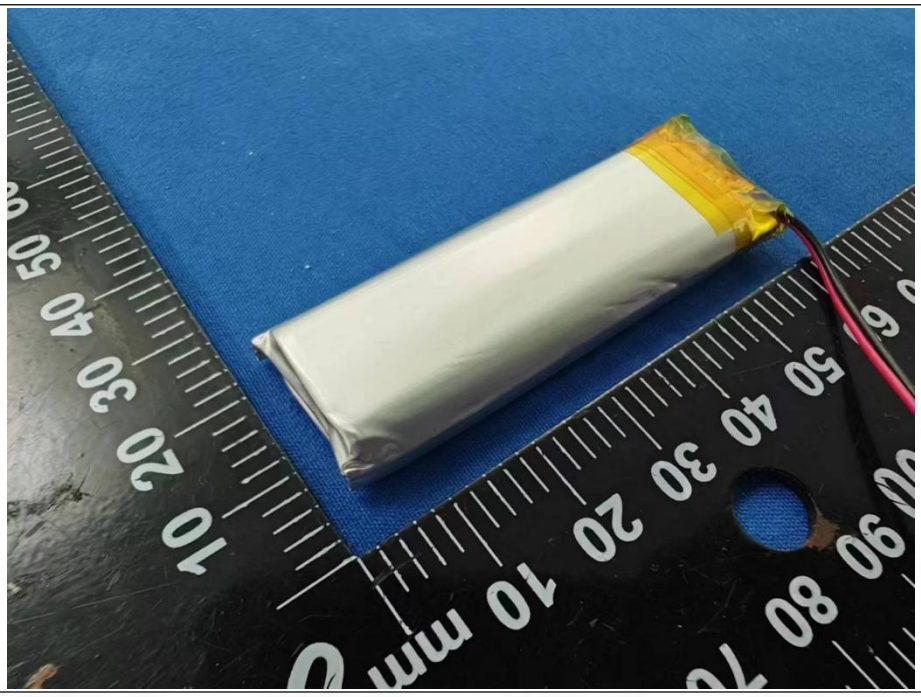

BTF Testing Lab (Shenzhen) Co., Ltd.
F101, 201 and 301, Building 1, Block 2, Tantou Industrial Park, Tantou Community, Songgang Street, Bao'an District, Shenzhen, China

BTF Testing Lab (Shenzhen) Co., Ltd.

F101, 201 and 301, Building 1, Block 2, Tantou Industrial Park, Tantou Community, Songgang Street, Bao'an District, Shenzhen, China

www.btf-lab.com

-- END OF REPORT --