This is a controlled document.
Check on Batam-intranet or SAP system for latest update.

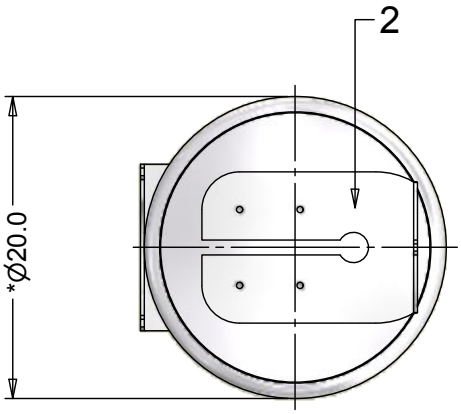

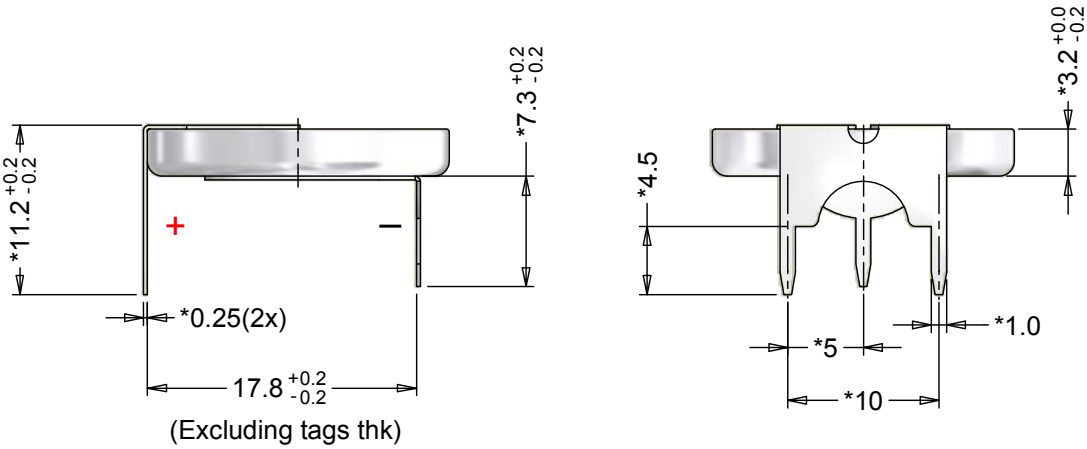

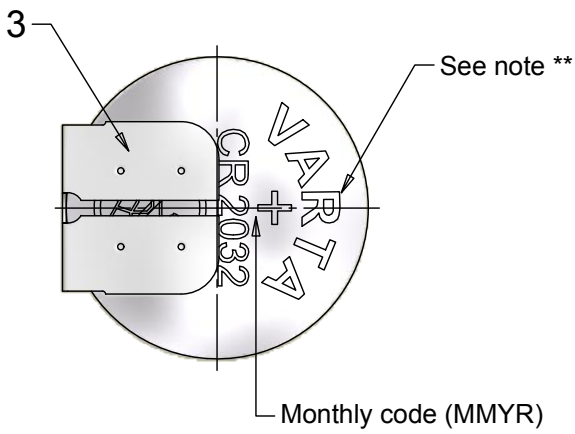

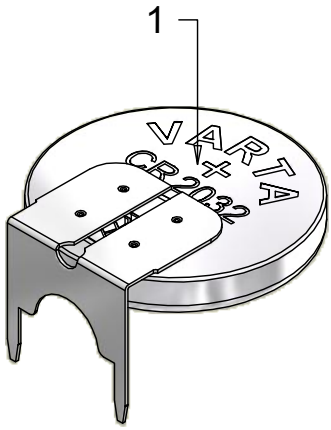

Note : 1) *Dimensions for reference only
2) **VARTA marking orientation only for reference, these marking may be covered.

Approx. wt. : 4 g

No	AO No	Revision	Date	Name
1	17-R486	Change diameter dimension from *Ø20+0.0/-0.2 to *Ø20.0mm	2017-10-05	Febri
0	16-N031	Refer to provisional drawing P25-00117, rev 100	2016-06-01	Jadi

Projection :	Material : Refer to part list no: 718145	Description : CR2032-P PCBD with solder tags	
Dimension in mm	Prepare & Checked	Verified & Approval	Dwg. No : 718145 (4 0 1)
Tolerance : As specified	2016-06-01 Jadi		
Scale : 2 : 1			VKB Order No : 06032 401 019

Rights reserved to make technical changes, as a result of further depelopment, without notice. This drawing is the property of VARTA Microbattery and must not be copied or disclosed to a third party without the written consent of VARTA Microbattery.

VARTA