TPS7A4001 100-V Input Voltage, 50-mA, Very High Voltage Linear Regulator

1 Features

- Very High Maximum Input Voltage: 100 V
- Wide Input Voltage Range: 7 to 100 V
- Accuracy:
  - Nominal: 1%
  - Over Line, Load, and Temperature: 2.5%
- Low Quiescent Current: 25 µA
- Quiescent Current at Shutdown: 4.1 µA
- Maximum Output Current: 50 mA
- CMOS Logic-Level-Compatible Enable Pin
- Adjustable Output Voltage from about 1.175 to 90 V
- Stable With Ceramic Capacitors:
  - Input Capacitance: ≥1 µF
  - Output Capacitance: ≥4.7 µF
- Dropout Voltage: 290 mV
- Built-In Current Limit and Thermal Shutdown Protection
- Package: High Thermal Performance HVSSOP PowerPAD™
- Operating Temperature Range: –40°C to 125°C

2 Applications

- Microprocessors, Microcontrollers Powered by Industrial Busses With High Voltage Transients
- Industrial Automation
- Telecom Infrastructure
- Automotive
- Power over Ethernet (PoE)
- LED Lighting
- Bias Power Supplies

3 Description

The TPS7A4001 device is a very high voltage-tolerant linear regulator that offers the benefits of a thermally-enhanced package (HVSSOP), and is able to withstand continuous DC or transient input voltages of up to 100 V.

The TPS7A4001 device is stable with any output capacitance greater than 4.7 µF and any input capacitance greater than 1 µF (over temperature and tolerance). Therefore, implementations of this device require minimal board space because of its miniaturized packaging (HVSSOP) and a potentially small output capacitor. In addition, the TPS7A4001 device offers an enable pin (EN) compatible with standard CMOS logic to enable a low-current shutdown mode.

The TPS7A4001 device has an internal thermal shutdown and current limiting to protect the system during fault conditions. The HVSSOP packages has an operating temperature range of T_J = –40°C to 125°C.

In addition, the TPS7A4001 device is ideal for generating a low-voltage supply from intermediate voltage rails in telecom and industrial applications; not only can it supply a well-regulated voltage rail, but it can also withstand and maintain regulation during very high and fast voltage transients. These features translate to simpler and more cost-effective electrical surge-protection circuitry for a wide range of applications, including PoE, bias supply, and LED lighting.

Device Information(1)

PART NUMBER	PACKAGE	BODY SIZE (NOM)
TPS7A4001	HVSSOP (8)	3.00 mm × 5.00 mm

(1) For all available packages, see the orderable addendum at the end of the data sheet.

Typical Application Schematic

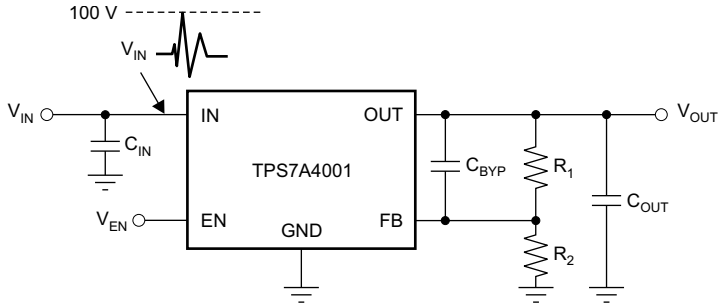

An IMPORTANT NOTICE at the end of this data sheet addresses availability, warranty, changes, use in safety-critical applications, intellectual property matters and other important disclaimers. PRODUCTION DATA.

Table of Contents

1 Features ... 1
2 Applications ... 1
3 Description ... 1
4 Revision History ... 2
5 Pin Configuration and Functions ... 3
6 Specifications ... 4
6.1 Absolute Maximum Ratings ... 4
6.2 ESD Ratings ... 4
6.3 Recommended Operating Conditions ... 4
6.4 Thermal Information ... 4
6.5 Electrical Characteristics ... 5
6.6 Typical Characteristics ... 6
7 Detailed Description ... 8
7.1 Overview ... 8
7.2 Functional Block Diagram ... 8
7.3 Feature Description ... 8
7.4 Device Functional Modes ... 9
8 Application and Implementation ... 10
8.1 Application Information ... 10
8.2 Typical Application ... 11
9 Power Supply Recommendations ... 12
10 Layout ... 13
10.1 Layout Guidelines ... 13
10.2 Layout Example ... 13
10.3 Thermal Considerations ... 13
10.4 Power Dissipation ... 14
11 Device and Documentation Support ... 15
11.1 Community Resources ... 15
11.2 Trademarks ... 15
11.3 Electrostatic Discharge Caution ... 15
11.4 Glossary ... 15
12 Mechanical, Packaging, and Orderable Information ... 15

4 Revision History

NOTE: Page numbers for previous revisions may differ from page numbers in the current version.

Changes from Revision A (March 2011) to Revision B	Page
• Added *ESD Ratings* table, *Feature Description* section, *Device Functional Modes*, *Application and Implementation* section, *Power Supply Recommendations* section, *Layout* section, *Device and Documentation Support* section, and *Mechanical, Packaging, and Orderable Information* section.	1
• Changed Package from MSOP-8 to HVSSOP.	1
• Changed T_J value for disabled mode operating mode from 165 to 170°C	9
• Changed value from 35 to 45°C	14

Changes from Original (March 2011) to Revision A	Page
• Changed all 105 V to 100 V on page 1	1

Copyright © 2011–2015, Texas Instruments Incorporated

5 Pin Configuration and Functions

DGN Package
8-Pin HVSSOP
Top View

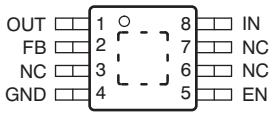

Pin Functions

PIN		I/O	DESCRIPTION
NAME	NO.		
OUT	1	O	Regulator output. A capacitor > 4.7 µF must be tied from this pin to ground to assure stability.
FB	2	O	This pin is the input to the control-loop error amplifier. It is used to set the output voltage of the device.
NC	3	—	Not internally connected. This pin must either be left open or tied to GND.
	6		
	7		
GND	4	—	Ground
EN	5	I	This pin turns the regulator on or off. If $V_{EN} \geq V_{EN_HI}$ the regulator is enabled. If $V_{EN} \leq V_{EN_LO}$, the regulator is disabled. If not used, the EN pin can be connected to IN. Make sure that $V_{EN} \leq V_{IN}$ at all times.
IN	8	I	Input supply
PowerPAD	—	—	Solder to printed-circuit-board (PCB) to enhance thermal performance. **NOTE: The PowerPAD is internally connected to GND.** Although it can be left floating, TI highly recommends connecting the PowerPAD to the GND plane.

6 Specifications

6.1 Absolute Maximum Ratings

over operating junction temperature range (unless otherwise noted)[1]

		MIN	MAX	UNIT
Voltage	IN pin to GND pin	–0.3	105	V
	OUT pin to GND pin	–0.3	105	
	OUT pin to IN pin	–105	0.3	
	FB pin to GND pin	–0.3	2	
	FB pin to IN pin	–105	0.3	
	EN pin to IN pin	–105	0.3	
	EN pin to GND pin	–0.3	105	
Current	Peak output	Internally limited		
Temperature	Operating virtual junction, T_J	–40	125	°C
	Storage, T_{stg}	–65	150	

(1) Stresses beyond those listed under *Absolute Maximum Ratings* may cause permanent damage to the device. These are stress ratings only, which do not imply functional operation of the device at these or any other conditions beyond those indicated under *Recommended Operating Conditions*. Exposure to absolute-maximum-rated conditions for extended periods may affect device reliability.

6.2 ESD Ratings

		VALUE	UNIT
$V_{(ESD)}$ Electrostatic discharge	Human-body model (HBM), per ANSI/ESDA/JEDEC JS-001[1]	±2500	V
	Charged-device model (CDM), per JEDEC specification JESD22-C101[2]	±500	

(1) JEDEC document JEP155 states that 500-V HBM allows safe manufacturing with a standard ESD control process.
(2) JEDEC document JEP157 states that 250-V CDM allows safe manufacturing with a standard ESD control process.

6.3 Recommended Operating Conditions

over operating junction temperature range (unless otherwise noted)

	MIN	NOM	MAX	UNIT
VIN	7		100	V
VOUT	1.161		90	V
VEN	0		100	V
IOUT	0		50	mA

6.4 Thermal Information

THERMAL METRIC[1]		TPS7A4001 DGN (HVVSOP) 8 PINS	UNIT
$R_{\theta JA}$	Junction-to-ambient thermal resistance	66.7	°C/W
$R_{\theta JC(top)}$	Junction-to-case (top) thermal resistance	54.1	°C/W
$R_{\theta JB}$	Junction-to-board thermal resistance	38.1	°C/W
ψ_{JT}	Junction-to-top characterization parameter	2	°C/W
ψ_{JB}	Junction-to-board characterization parameter	37.8	°C/W
$R_{\theta JC(bot)}$	Junction-to-case (bottom) thermal resistance	15.5	°C/W

(1) For more information about traditional and new thermal metrics, see the *Semiconductor and IC Package Thermal Metrics* application report, SPRA953.

Copyright © 2011–2015, Texas Instruments Incorporated

6.5 Electrical Characteristics

At T_J = –40°C to 125°C, V_{IN} = $V_{OUT(NOM)}$ + 2 V or V_{IN} = 7 V (whichever is greater), V_{EN} = V_{IN}, I_{OUT} = 100 µA, C_{IN} = 1 µF, C_{OUT} = 4.7 µF, and FB tied to OUT, unless otherwise noted.

PARAMETER		TEST CONDITIONS	MIN	TYP	MAX	UNIT
V_{IN}	Input voltage		7		100	V
V_{REF}	Internal reference	T_J = 25°C, V_{FB} = V_{REF}, V_{IN} = 9 V, I_{OUT} = 25 mA	1.161	1.173	1.185	V
V_{OUT}	Output voltage range(1)	V_{IN} ≥ $V_{OUT(NOM)}$ + 2 V	V_{REF}		90	V
	Nominal accuracy	T_J = 25°C, V_{IN} = 9 V, I_{OUT} = 25 mA	–1		1	$\%V_{OUT}$
	Overall accuracy	$V_{OUT(NOM)}$ + 2 V ≤ V_{IN} ≤ 24 V(2) 100 µA ≤ I_{OUT} ≤ 50 mA	–2.5		2.5	$\%V_{OUT}$
$\frac{\Delta\%V_{OUT}}{\Delta V_{IN}}$	Line regulation	7 V ≤ V_{IN} ≤ 100 V		0.03		$\%V_{OUT}$
$\frac{\Delta\%V_{OUT}}{\Delta I_{OUT}}$	Load regulation	100 µA ≤ I_{OUT} ≤ 50 mA		0.31		$\%V_{OUT}$
V_{DO}	Dropout voltage	V_{IN} = 17 V, $V_{OUT(NOM)}$ = 18 V, I_{OUT} = 20 mA		290		mV
		V_{IN} = 17 V, $V_{OUT(NOM)}$ = 18 V, I_{OUT} = 50mA		0.78	1.3	V
I_{LIM}	Current limit	V_{OUT} = 90% $V_{OUT(NOM)}$, V_{IN} = 7 V, T_J ≤ 85°C	51	117	200	mA
		V_{OUT} = 90% $V_{OUT(NOM)}$, V_{IN} = 9 V	51	128	200	mA
I_{GND}	Ground current	7 V ≤ V_{IN} ≤ 100 V, I_{OUT} = 0 mA		25	65	µA
		I_{OUT} = 50 mA		25		µA
I_{SHDN}	Shutdown supply current	V_{EN} = 0.4 V		4.1	20	µA
I_{FB}	Feedback current(3)		–0.1	0.01	0.1	µA
I_{EN}	Enable current	7 V ≤ V_{IN} ≤ 100 V, V_{IN} = V_{EN}		0.02	1	µA
V_{EN_HI}	Enable high-level voltage		1.5		V_{IN}	V
V_{EN_LO}	Enable low- level voltage		0		0.4	V
V_{NOISE}	Output noise voltage	V_{IN} = 12 V, $V_{OUT(NOM)}$ = V_{REF}, C_{OUT} = 10 µF, BW = 10 Hz to 100 kHz		58		μV_{RMS}
		V_{IN} = 12 V, $V_{OUT(NOM)}$ = 5 V, C_{OUT} = 10 µF, C_{BYP}(4) = 10 nF, BW = 10 Hz to 100 kHz		73		μV_{RMS}
PSRR	Power-supply rejection ratio	V_{IN} = 12 V, $V_{OUT(NOM)}$ = 5 V, C_{OUT} = 10 µF, C_{BYP}(4) = 10 nF, f = 100 Hz		65		dB
T_{SD}	Thermal shutdown temperature	Shutdown, temperature increasing		170		°C
		Reset, temperature decreasing		150		°C
T_J	Operating junction temperature		–40		125	°C

(1) To ensure stability at no-load conditions, a current from the feedback resistive network greater than or equal to 10µA is required.
(2) Maximum input voltage is limited to 24 V because of the package power dissipation limitations at full load (P ≈ (V_{IN} – V_{OUT}) × I_{OUT} = (24 V – V_{REF}) × 50 mA ≈ 1.14 W). The device is capable of sourcing a maximum current of 50 mA at higher input voltages as long as the power dissipated is within the thermal limits of the package plus any external heatsinking.
(3) I_{FB} > 0 flows out of the device.
(4) C_{BYP} refers to a bypass capacitor connected to the FB and OUT pins.

6.6 Typical Characteristics

At T_J = –40°C to 125°C, V_{IN} = $V_{OUT(NOM)}$ + 2 V or V_{IN} = 9 V (whichever is greater), V_{EN} = V_{IN}, I_{OUT} = 100 µA, C_{IN} = 1 µF, C_{OUT} = 4.7 µF, and FB tied to OUT, unless otherwise noted.

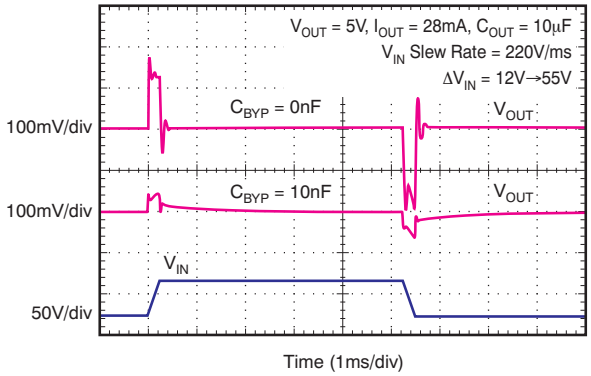

Figure 1. Line Transient Response vs C_{BYP}

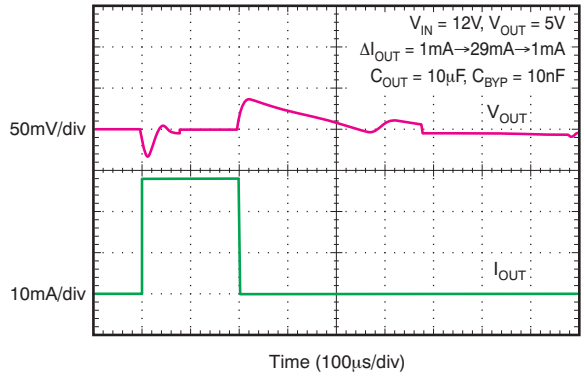

Figure 2. Load Transient Response

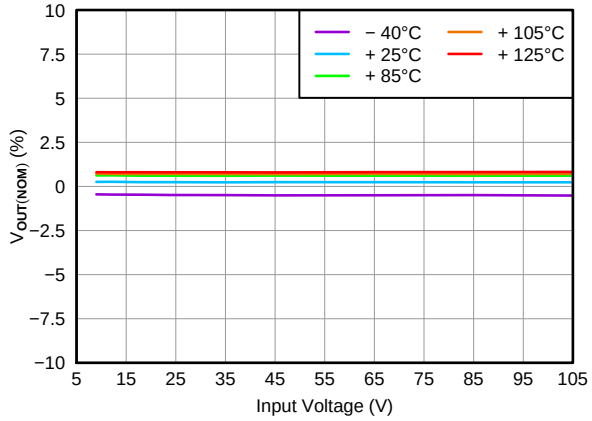

Figure 3. Line Regulation

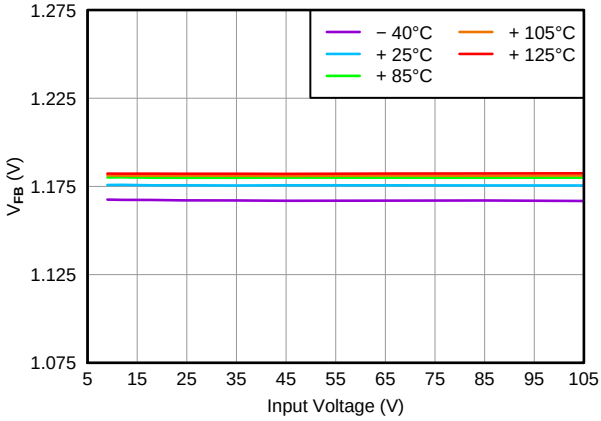

Figure 4. Feedback Voltage

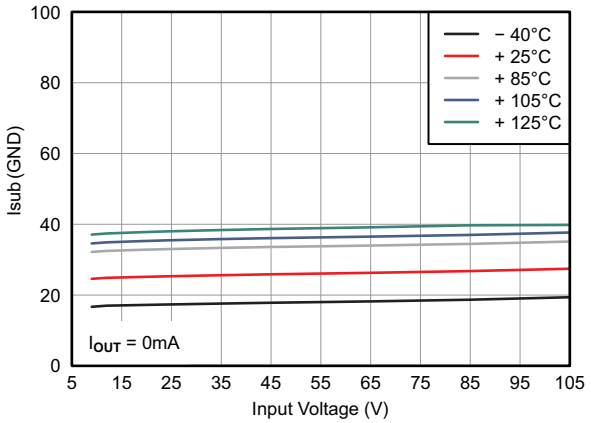

Figure 5. Ground Current vs Input Voltage

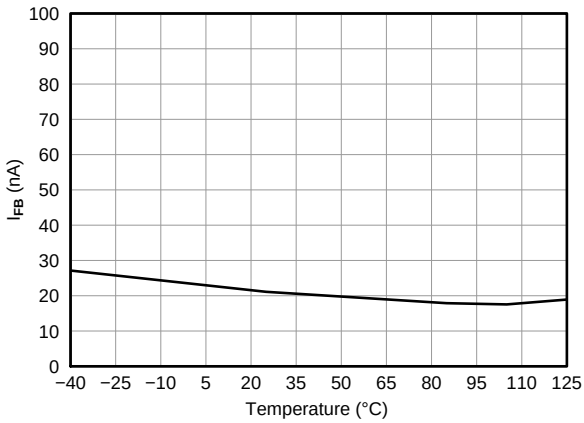

Figure 6. Feedback Current

Copyright © 2011–2015, Texas Instruments Incorporated

Typical Characteristics (continued)

At T_J = –40°C to 125°C, V_{IN} = $V_{OUT(NOM)}$ + 2 V or V_{IN} = 9 V (whichever is greater), V_{EN} = V_{IN}, I_{OUT} = 100 µA, C_{IN} = 1 µF, C_{OUT} = 4.7 µF, and FB tied to OUT, unless otherwise noted.

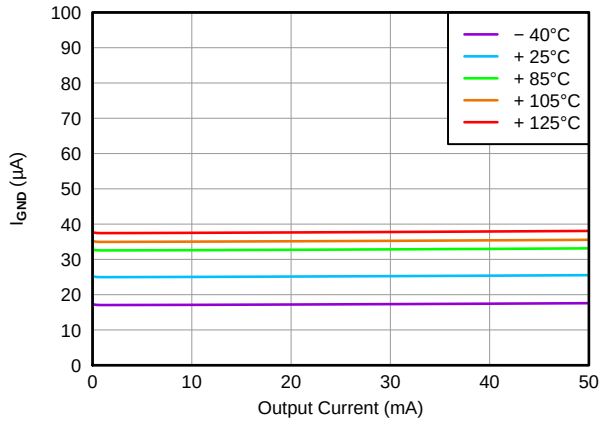

Figure 7. Ground Current vs Output Voltage

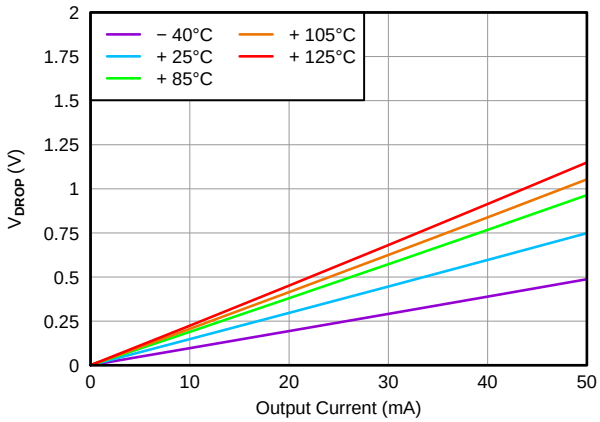

Figure 8. Dropout Voltage

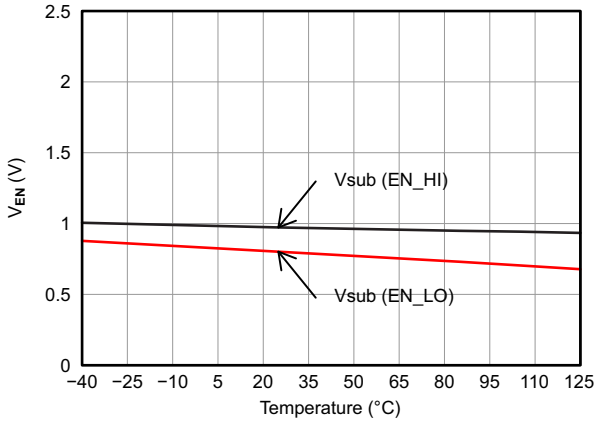

Figure 9. Enable Threshold Voltage

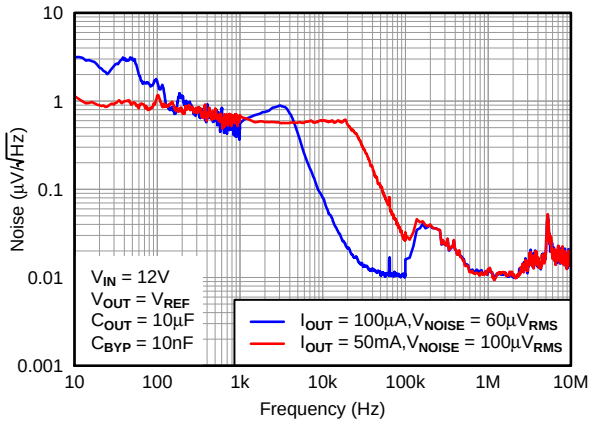

Figure 10. Output Spectral Noise Density

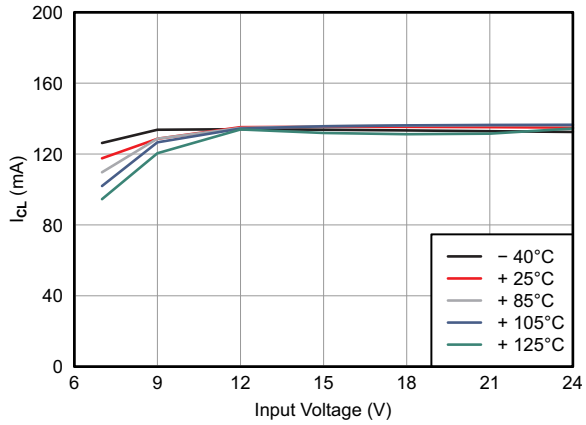

Figure 11. Current Limit

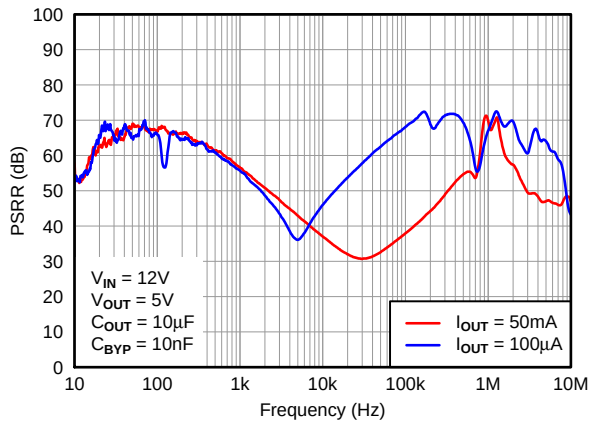

Figure 12. Power-Supply Rejection Ratio

7 Detailed Description

7.1 Overview

The TPS7A4001 device belongs to a new generation of linear regulators that use an innovative BiCMOS process technology to achieve very high maximum input and output voltages.

This process not only allows the TPS7A4001 device to maintain regulation during very fast high-voltage transients up to 105 V, but it also allows the TPS7A4001 device to regulate from a continuous high-voltage input rail. Unlike other regulators created using bipolar technology, the ground current of the TPS7A4001 device is also constant over its output current range, resulting in increased efficiency and lower power consumption.

These features, combined with a high thermal performance HVSSOP PowerPAD package, make this device ideal for industrial and telecom applications.

7.2 Functional Block Diagram

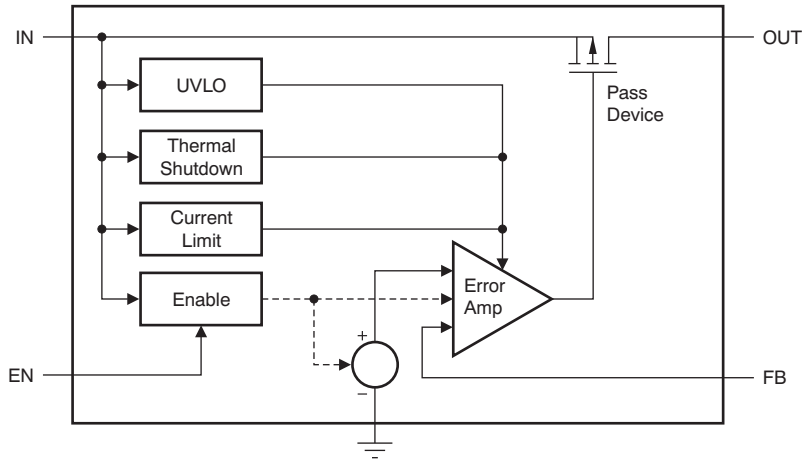

7.3 Feature Description

7.3.1 Internal Current Limit

The fixed internal current limit of the TPS7A4001 device helps protect the regulator during fault conditions. The maximum amount of current the device can source is the current limit (309 mA, typical), and is largely independent of output voltage. For reliable operation, the device does not operate in current limit for extended periods of time.

7.3.2 Enable Pin Operation

The TPS7A4001 device provides an enable pin (EN) feature that turns on the regulator when $V_{EN} > V_{EN_HI}$, and disables the regulator when $V_{EN} < V_{EN_LO}$.

7.3.3 Thermal Protection

Thermal protection disables the output when the junction temperature rises to approximately 170°C, allowing the device to cool. When the junction temperature cools to approximately 150°C, the output circuitry is enabled. Depending on power dissipation, thermal resistance, and ambient temperature, the thermal protection circuit may cycle on and off. This cycling limits the dissipation of the regulator, protecting it from damage as a result of overheating.

Any tendency to activate the thermal protection circuit indicates excessive power dissipation or an inadequate heatsink. For reliable operation, limit junction temperature to a maximum of 125°C. To estimate the margin of safety in a complete design (including heatsink), increase the ambient temperature until the thermal protection is triggered; use worst-case loads and signal conditions. For good reliability, trigger thermal protection at least 35°C above the maximum expected ambient condition of your particular application. This configuration produces a worst-case junction temperature of 125°C at the highest expected ambient temperature and worst-case load.

Copyright © 2011–2015, Texas Instruments Incorporated

Feature Description (continued)

The internal protection circuitry of the TPS7A4001 device has been designed to protect against overload conditions. The protection circuitry was not intended to replace proper heatsinking. Continuously running the TPS7A4001 device into thermal shutdown degrades device reliability.

7.3.4 Undervoltage Lockout (UVLO)

The TPS7A4001 contains an Undervoltage Lockout comparator that ensures the error amplifier is disabled when the input voltage is below the required minimum operational voltage. The minimum recommended operational voltage is 7 V.

7.4 Device Functional Modes

7.4.1 Normal Operation

The device regulates to the nominal output voltage under the following conditions:

- The input voltage is at least as high as $V_{IN(min)}$.
- The input voltage is greater than the nominal output voltage added to the dropout voltage.
- The enable voltage has previously exceeded the enable rising threshold voltage and has not decreased below the enable falling threshold.
- The output current is less than the current limit.
- The device junction temperature is less than the maximum specified junction temperature.

7.4.2 Dropout Operation

If the input voltage is lower than the nominal output voltage plus the specified dropout voltage, but all other conditions are met for normal operation, the device operates in dropout mode. In this mode of operation, the output voltage is the same as the input voltage minus the dropout voltage. The transient performance of the device is significantly degraded because the pass device (as a bipolar junction transistor, or BJT) is in saturation and no longer controls the current through the LDO. Line or load transients in dropout can result in large output voltage deviations.

7.4.3 Disabled

The device is disabled under the following conditions:

- The enable voltage is less than the enable falling threshold voltage or has not yet exceeded the enable rising threshold.
- The device junction temperature is greater than the thermal shutdown temperature.

Table 1 lists the conditions that lead to the different modes of operation.

Table 1. Device Functional Mode Comparison

OPERATING MODE	PARAMETER			
	V_{IN}	V_{EN}	I_{OUT}	T_J
Normal mode	$V_{IN} > V_{OUT(nom)} + V_{DO}$ and $V_{IN} > V_{IN(min)}$	$V_{EN} > V_{EN_HI}$	$I_{OUT} < I_{LIM}$	$T_J < 125°C$
Dropout mode	$V_{IN(min)} < V_{IN} < V_{OUT(nom)} + V_{DO}$	$V_{EN} > V_{EN_HI}$	—	$T_J < 125°C$
Disabled mode (any true condition disables the device)	—	$V_{EN} < V_{EN_LO}$	—	$T_J > 170°C$

8 Application and Implementation

NOTE

Information in the following applications sections is not part of the TI component specification, and TI does not warrant its accuracy or completeness. TI's customers are responsible for determining suitability of components for their purposes. Customers should validate and test their design implementation to confirm system functionality.

8.1 Application Information

One of the primary applications of the TPS7A4001 device is to provide transient voltage protection to sensitive circuitry that may be damaged in the presence of high-voltage spikes.

This transient voltage protection can be more cost-effective and compact compared to topologies that use a transient voltage suppression (TVS) block.

8.1.1 Adjustable Operation

The TPS7A4001 device has an output voltage range of about 1.175 to 90 V. The nominal output voltage of the device is set by two external resistors, as shown in Figure 13.

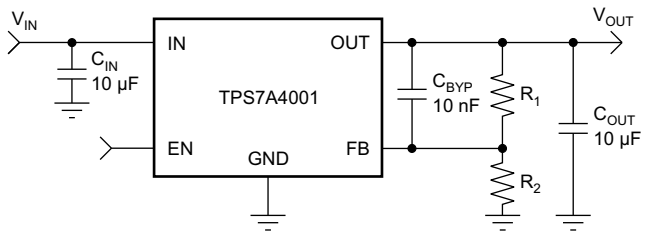

Figure 13. Adjustable Operation for Maximum AC Performance

Calculate R_1 and R_2 for any output voltage range using the formula shown in Equation 1. To ensure stability under no-load conditions, this resistive network must provide a current ≥ 10 µA.

$$R_1 = R_2\left(\frac{V_{OUT}}{V_{REF}} - 1\right), \quad \text{where } \frac{V_{OUT}}{R_1 + R_2} \geq 10\mu A \tag{1}$$

If greater voltage accuracy is required, consider the output voltage offset contributions because of the feedback pin current and use 0.1% tolerance resistors.

Copyright © 2011–2015, Texas Instruments Incorporated

8.2 Typical Application

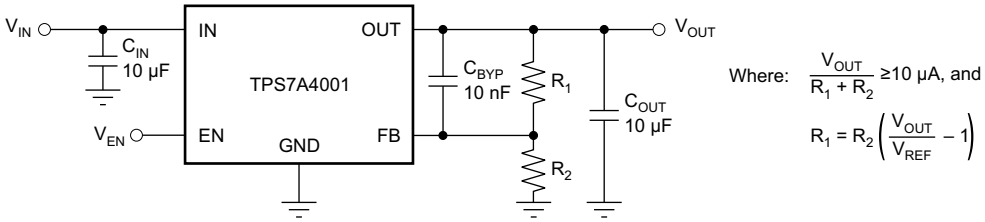

Figure 14. Example Circuit to Maximize Transient Performance

8.2.1 Design Requirements

For this design example, use the following parameters listed in Table 2.

Table 2. Design Parameters

PARAMETER	VALUE
V_{IN}	12 V, with 55 V surge tolerance
V_{OUT}	5 V (ideal), 4.981 (actual)
I_{OUT}	28 mA
Accuracy	5 %
R1, R2	162 kΩ, 49.9 kΩ

8.2.2 Detailed Design Procedure

The maximum value of total feedback resistance can be calculated to be 500 kΩ. Equation 1 was used to calculate R1 and R2, and standard 1% resistors were selected to keep the accuracy within the 5% allocation. 10-uF ceramic input and output capacitors were selected, along with a 10-nF bypass capacitor for optimal AC performance.

8.2.2.1 Capacitor Recommendations

Low equivalent series resistance (ESR) capacitors should be used for the input, output, and bypass capacitors. Ceramic capacitors with X7R and X5R dielectrics are required. Ceramic X7R capacitors offer improved voltage and temperature coefficients, while ceramic X5R capacitors are the most cost-effective and are available in higher values.

NOTE

High ESR capacitors may degrade PSRR.

8.2.2.2 Input and Output Capacitor Requirements

The TPS7A4001 device high voltage linear regulator achieves stability with a minimum output capacitance of 4.7 µF and input capacitance of 1 µF; however, TI highly recommends to use 10-µF output and input capacitors to maximize AC performance.

8.2.2.3 Bypass Capacitor Requirements

Although a bypass capacitor (C_{BYP}) is not needed to achieve stability, TI highly recommends using a 10-nF bypass capacitor to maximize AC performance (including line transient, noise, and PSRR). For additional information regarding the performance improvements of using a bypass capacitor, see .

8.2.2.4 Transient Response

As with any regulator, increasing the size of the output capacitor reduces overshoot and undershoot magnitude but increases the duration of the transient response.

The presence of the C_{BYP} capacitor may greatly improve the line transient response of the TPS7A4001 device, as shown in Figure 1.

8.2.3 Application Curves

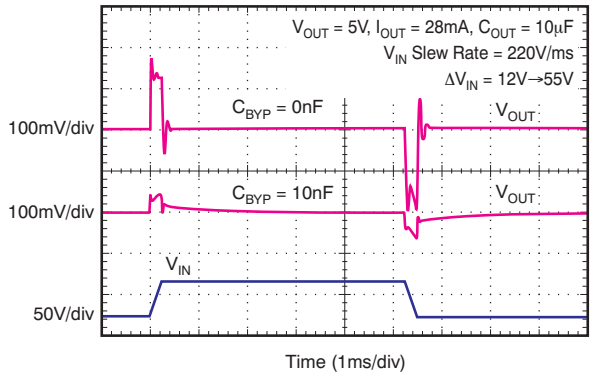

Figure 15. Line Transient Response vs C_{BYP}

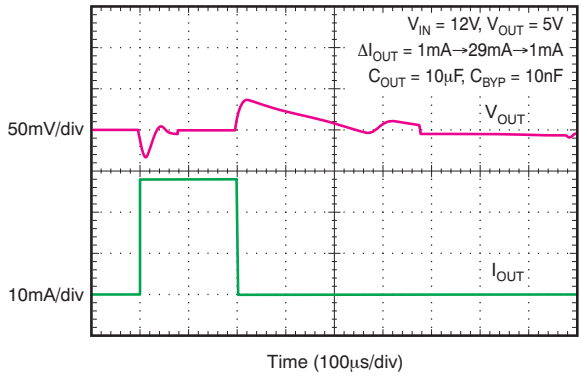

Figure 16. Load Transient Response

9 Power Supply Recommendations

The input supply for the LDO should not exceed its recommended operating conditions (7 V to 100 V). The input voltage should provide adequate headroom for the device to have a regulated output. If the input supply is noisy, additional input capacitors with low ESR can help improve the output noise performance. The input and output supplies should also be bypassed with 10-µF capacitors located near the input and output pins. There should be no other components located between these capacitors and the pins.

Copyright © 2011–2015, Texas Instruments Incorporated

10 Layout

10.1 Layout Guidelines

10.1.1 Board Layout Recommendations to Improve PSRR and Noise Performance

To improve AC performance such as PSRR, output noise, and transient response, TI recommends designing the board with separate ground planes for IN and OUT, with each ground plane connected only at the GND pin of the device. In addition, the ground connection for the output capacitor should connect directly to the GND pin of the device.

Equivalent series inductance (ESL) and ESR must be minimized to maximize performance and ensure stability. Every capacitor (C_{IN}, C_{OUT}, C_{BYP}) must be placed as close as possible to the device and on the same side of the PCB as the regulator itself.

Do not place any of the capacitors on the opposite side of the PCB from where the regulator is installed. The use of vias and long traces is strongly discouraged because they may impact system performance negatively and even cause instability.

If possible, and to ensure the maximum performance denoted in this product data sheet, use the same layout pattern used for the TPS7A40 evaluation board, available at www.ti.com.

10.2 Layout Example

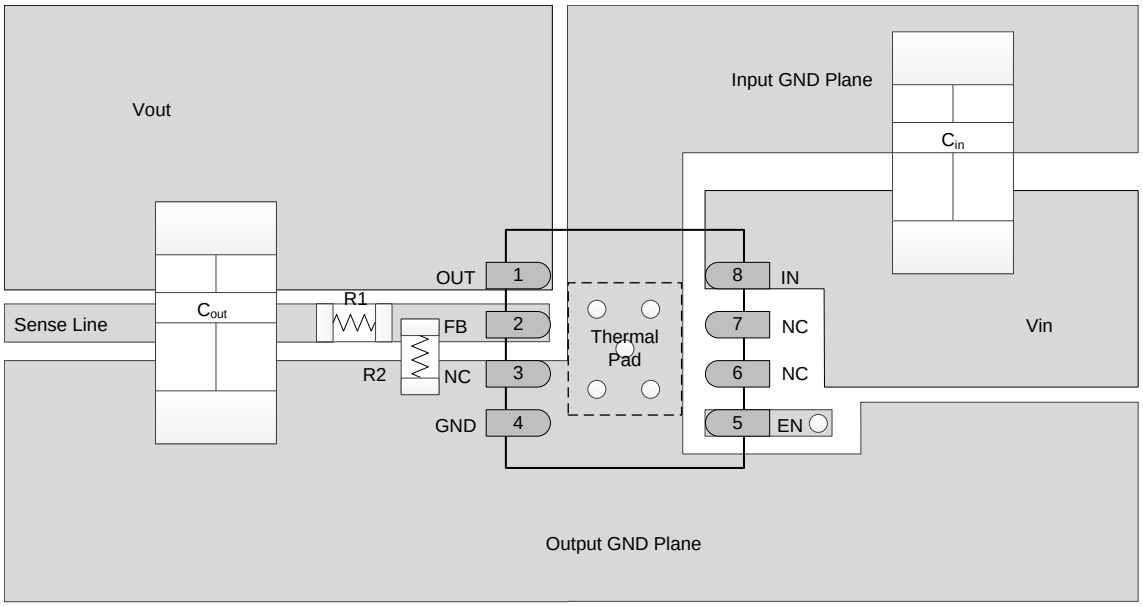

Figure 17. Recommended Layout Example

10.3 Thermal Considerations

Thermal protection disables the output when the junction temperature rises to approximately 170°C, allowing the device to cool. When the junction temperature cools to approximately 150°C, the output circuitry is enabled. Depending on power dissipation, thermal resistance, and ambient temperature, the thermal protection circuit may cycle ON and OFF. This cycling limits the dissipation of the regulator, protecting it from damage as a result of overheating.

Thermal Considerations (continued)

Any tendency to activate the thermal protection circuit indicates excessive power dissipation or an inadequate heatsink. For reliable operation, junction temperature should be limited to a maximum of 125°C. To estimate the margin of safety in a complete design (including heatsink), increase the ambient temperature until the thermal protection is triggered; use worst-case loads and signal conditions. For good reliability, thermal protection should trigger at least 45°C above the maximum expected ambient condition of the particular application. This configuration produces a worst-case junction temperature of 125°C at the highest expected ambient temperature and worst-case load.

The internal protection circuitry of the TPS7A4001 has been designed to protect against overload conditions. It was not intended to replace proper heatsinking. Continuously running the TPS7A4001 device into thermal shutdown degrades device reliability.

10.4 Power Dissipation

The ability to remove heat from the die is different for each package type, presenting different considerations in the PCB layout. The PCB area around the device that is free of other components moves the heat from the device to the ambient air. Using heavier copper increases the effectiveness in removing heat from the device. The addition of plated through-holes to heat dissipating layers also improves the heatsink effectiveness.

Power dissipation depends on input voltage and load conditions. Power dissipation (P_D) is equal to the product of the output current times the voltage drop across the output pass element, as shown in Equation 2:

$$P_D = (V_{IN} - V_{OUT})\, I_{OUT} \tag{2}$$

Copyright © 2011–2015, Texas Instruments Incorporated

11 Device and Documentation Support

11.1 Community Resources

The following links connect to TI community resources. Linked contents are provided "AS IS" by the respective contributors. They do not constitute TI specifications and do not necessarily reflect TI's views; see TI's Terms of Use.

TI E2E™ Online Community ***TI's Engineer-to-Engineer (E2E) Community.*** Created to foster collaboration among engineers. At e2e.ti.com, you can ask questions, share knowledge, explore ideas and help solve problems with fellow engineers.

Design Support ***TI's Design Support*** Quickly find helpful E2E forums along with design support tools and contact information for technical support.

11.2 Trademarks

PowerPAD, E2E are trademarks of Texas Instruments.
All other trademarks are the property of their respective owners.

11.3 Electrostatic Discharge Caution

These devices have limited built-in ESD protection. The leads should be shorted together or the device placed in conductive foam during storage or handling to prevent electrostatic damage to the MOS gates.

11.4 Glossary

SLYZ022 — *TI Glossary*.

This glossary lists and explains terms, acronyms, and definitions.

12 Mechanical, Packaging, and Orderable Information

The following pages include mechanical, packaging, and orderable information. This information is the most current data available for the designated devices. This data is subject to change without notice and revision of this document. For browser-based versions of this data sheet, refer to the left-hand navigation.

PACKAGING INFORMATION

Orderable Device	Status (1)	Package Type	Package Drawing	Pins	Package Qty	Eco Plan (2)	Lead finish/ Ball material (6)	MSL Peak Temp (3)	Op Temp (°C)	Device Marking (4/5)	Samples
TPS7A4001DGNR	ACTIVE	HVSSOP	DGN	8	2500	RoHS & Green	NIPDAU	Level-2-260C-1 YEAR	-40 to 125	QVQ	Samples
TPS7A4001DGNT	ACTIVE	HVSSOP	DGN	8	250	RoHS & Green	NIPDAU	Level-2-260C-1 YEAR	-40 to 125	QVQ	Samples

(1) The marketing status values are defined as follows:
ACTIVE: Product device recommended for new designs.
LIFEBUY: TI has announced that the device will be discontinued, and a lifetime-buy period is in effect.
NRND: Not recommended for new designs. Device is in production to support existing customers, but TI does not recommend using this part in a new design.
PREVIEW: Device has been announced but is not in production. Samples may or may not be available.
OBSOLETE: TI has discontinued the production of the device.

(2) **RoHS:** TI defines "RoHS" to mean semiconductor products that are compliant with the current EU RoHS requirements for all 10 RoHS substances, including the requirement that RoHS substance do not exceed 0.1% by weight in homogeneous materials. Where designed to be soldered at high temperatures, "RoHS" products are suitable for use in specified lead-free processes. TI may reference these types of products as "Pb-Free".
RoHS Exempt: TI defines "RoHS Exempt" to mean products that contain lead but are compliant with EU RoHS pursuant to a specific EU RoHS exemption.
Green: TI defines "Green" to mean the content of Chlorine (Cl) and Bromine (Br) based flame retardants meet JS709B low halogen requirements of <=1000ppm threshold. Antimony trioxide based flame retardants must also meet the <=1000ppm threshold requirement.

(3) MSL, Peak Temp. - The Moisture Sensitivity Level rating according to the JEDEC industry standard classifications, and peak solder temperature.

(4) There may be additional marking, which relates to the logo, the lot trace code information, or the environmental category on the device.

(5) Multiple Device Markings will be inside parentheses. Only one Device Marking contained in parentheses and separated by a "~" will appear on a device. If a line is indented then it is a continuation of the previous line and the two combined represent the entire Device Marking for that device.

(6) Lead finish/Ball material - Orderable Devices may have multiple material finish options. Finish options are separated by a vertical ruled line. Lead finish/Ball material values may wrap to two lines if the finish value exceeds the maximum column width.

Important Information and Disclaimer: The information provided on this page represents TI's knowledge and belief as of the date that it is provided. TI bases its knowledge and belief on information provided by third parties, and makes no representation or warranty as to the accuracy of such information. Efforts are underway to better integrate information from third parties. TI has taken and continues to take reasonable steps to provide representative and accurate information but may not have conducted destructive testing or chemical analysis on incoming materials and chemicals. TI and TI suppliers consider certain information to be proprietary, and thus CAS numbers and other limited information may not be available for release.

In no event shall TI's liability arising out of such information exceed the total purchase price of the TI part(s) at issue in this document sold by TI to Customer on an annual basis.

OTHER QUALIFIED VERSIONS OF TPS7A4001 :

- Enhanced Product: TPS7A4001-EP

NOTE: Qualified Version Definitions:

- Enhanced Product - Supports Defense, Aerospace and Medical Applications

TAPE AND REEL INFORMATION

REEL DIMENSIONS

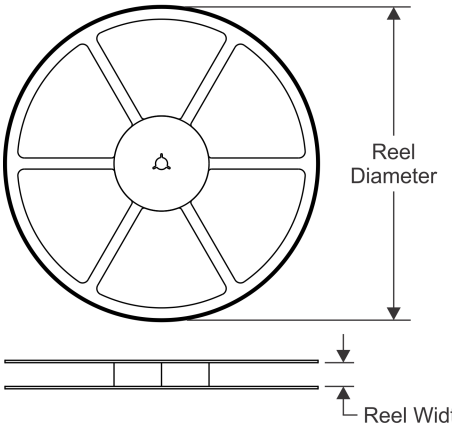

TAPE DIMENSIONS

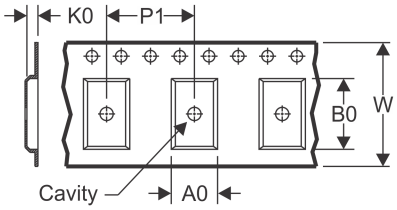

A0	Dimension designed to accommodate the component width
B0	Dimension designed to accommodate the component length
K0	Dimension designed to accommodate the component thickness
W	Overall width of the carrier tape
P1	Pitch between successive cavity centers

QUADRANT ASSIGNMENTS FOR PIN 1 ORIENTATION IN TAPE

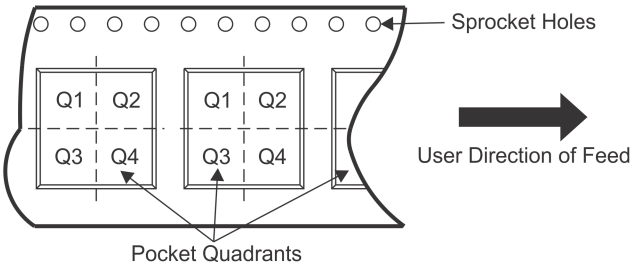

*All dimensions are nominal

Device	Package Type	Package Drawing	Pins	SPQ	Reel Diameter (mm)	Reel Width W1 (mm)	A0 (mm)	B0 (mm)	K0 (mm)	P1 (mm)	W (mm)	Pin1 Quadrant
TPS7A4001DGNR	HVSSOP	DGN	8	2500	330.0	12.4	5.3	3.3	1.3	8.0	12.0	Q1
TPS7A4001DGNT	HVSSOP	DGN	8	250	180.0	12.4	5.3	3.3	1.3	8.0	12.0	Q1

TAPE AND REEL BOX DIMENSIONS

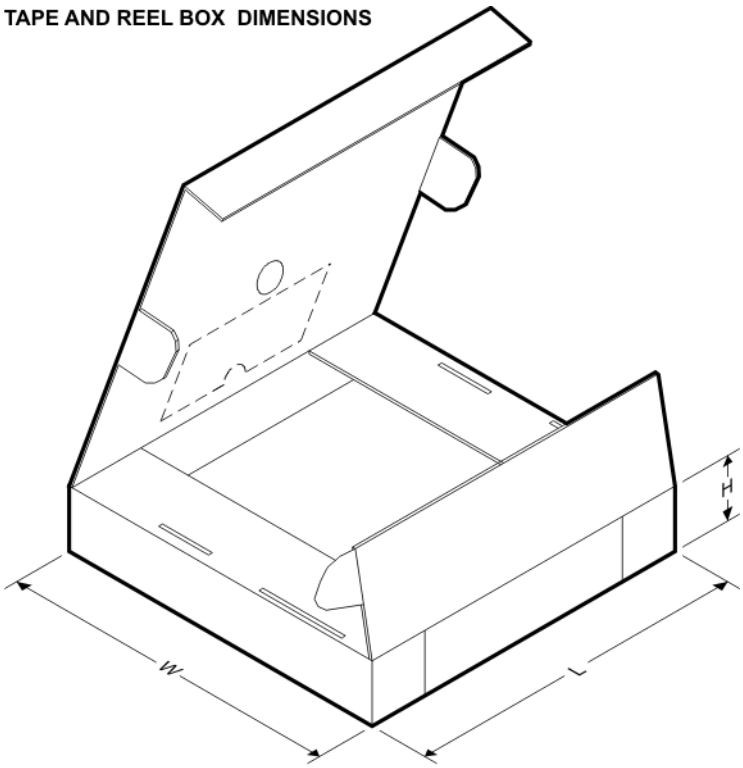

*All dimensions are nominal

Device	Package Type	Package Drawing	Pins	SPQ	Length (mm)	Width (mm)	Height (mm)
TPS7A4001DGNR	HVSSOP	DGN	8	2500	367.0	367.0	38.0
TPS7A4001DGNT	HVSSOP	DGN	8	250	213.0	191.0	35.0

GENERIC PACKAGE VIEW

DGN 8

PowerPAD VSSOP - 1.1 mm max height

3 x 3, 0.65 mm pitch

SMALL OUTLINE PACKAGE

This image is a representation of the package family, actual package may vary.
Refer to the product data sheet for package details.

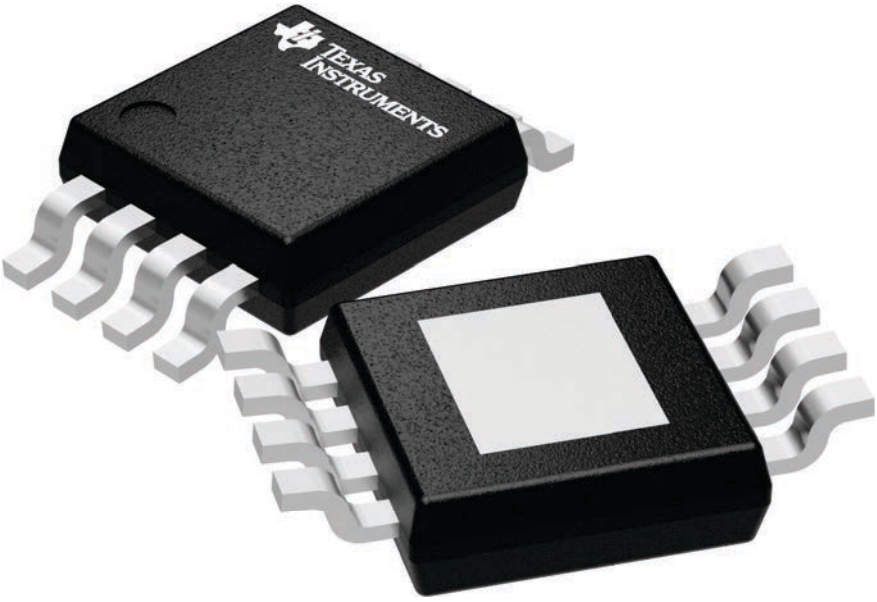

4225482/A

PACKAGE OUTLINE

DGN0008B

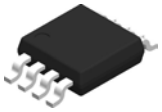

PowerPAD™ VSSOP - 1.1 mm max height

SMALL OUTLINE PACKAGE

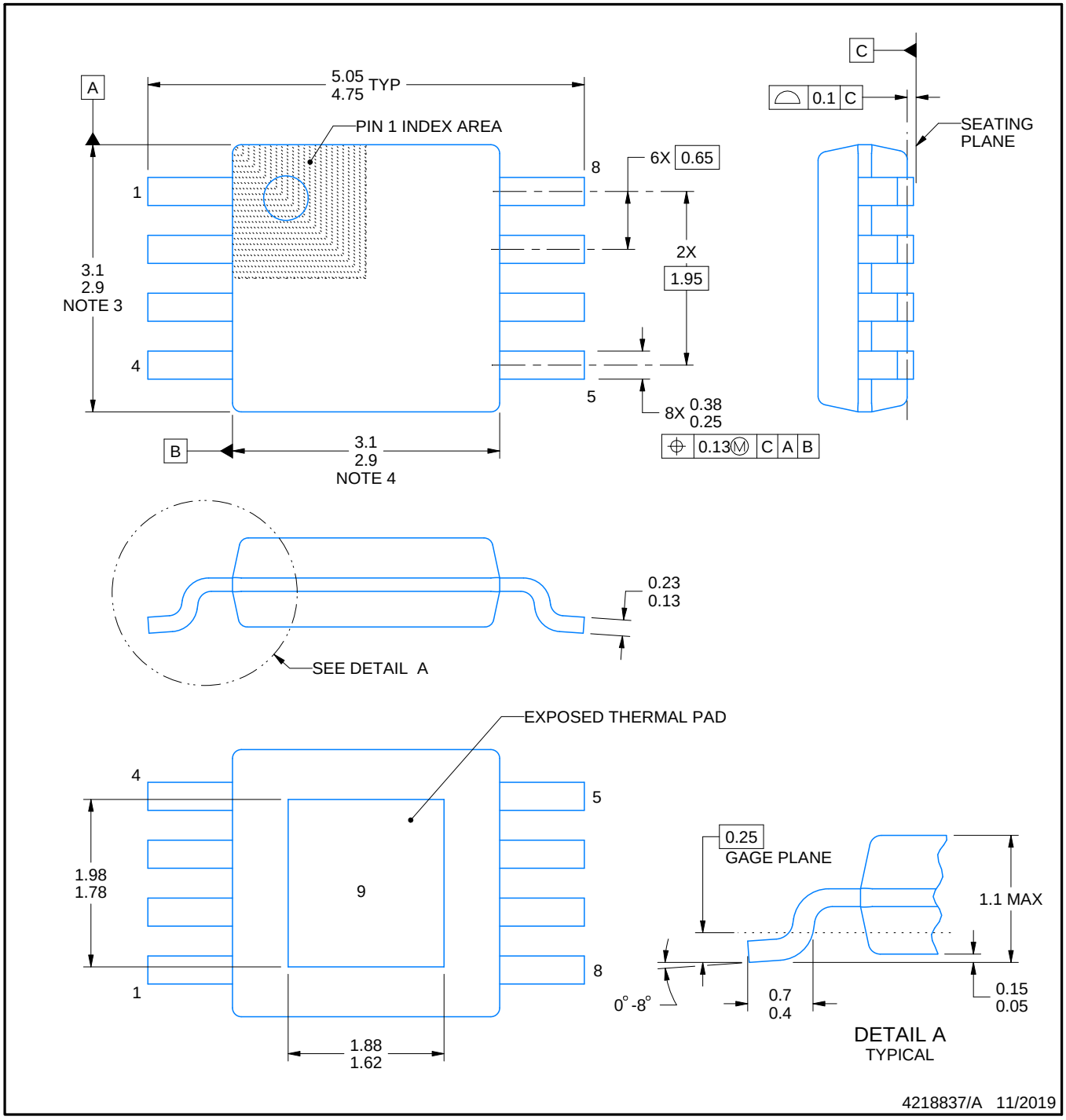

PowerPAD is a trademark of Texas Instruments.

NOTES:

1. All linear dimensions are in millimeters. Any dimensions in parenthesis are for reference only. Dimensioning and tolerancing per ASME Y14.5M.
2. This drawing is subject to change without notice.
3. This dimension does not include mold flash, protrusions, or gate burrs. Mold flash, protrusions, or gate burrs shall not exceed 0.15 mm per side.
4. This dimension does not include interlead flash. Interlead flash shall not exceed 0.25 mm per side.
5. Reference JEDEC registration MO-187.

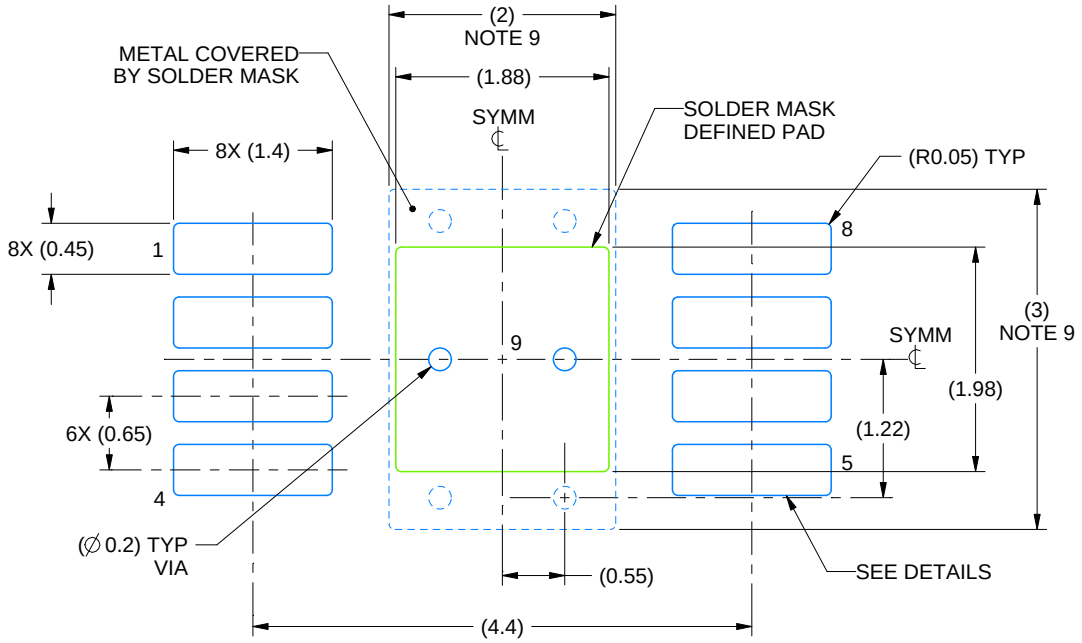

LAND PATTERN EXAMPLE
EXPOSED METAL SHOWN
SCALE: 15X

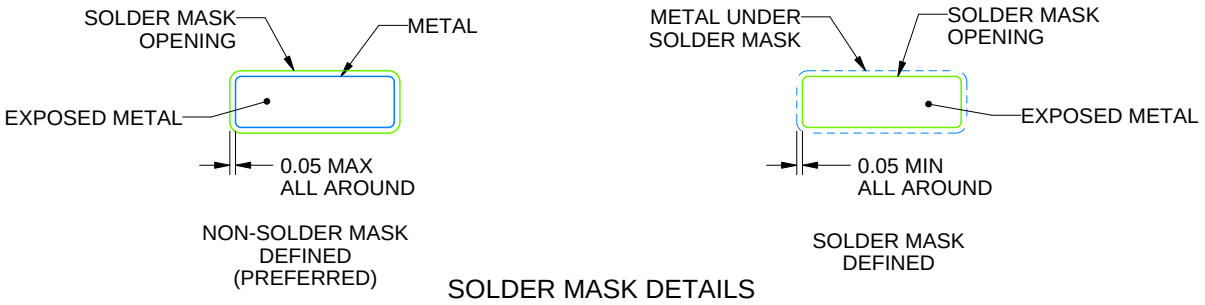

SOLDER MASK DETAILS

4218837/A 11/2019

NOTES: (continued)

6. Publication IPC-7351 may have alternate designs.
7. Solder mask tolerances between and around signal pads can vary based on board fabrication site.
8. Vias are optional depending on application, refer to device data sheet. If any vias are implemented, refer to their locations shown on this view. It is recommended that vias under paste be filled, plugged or tented.
9. Size of metal pad may vary due to creepage requirement.

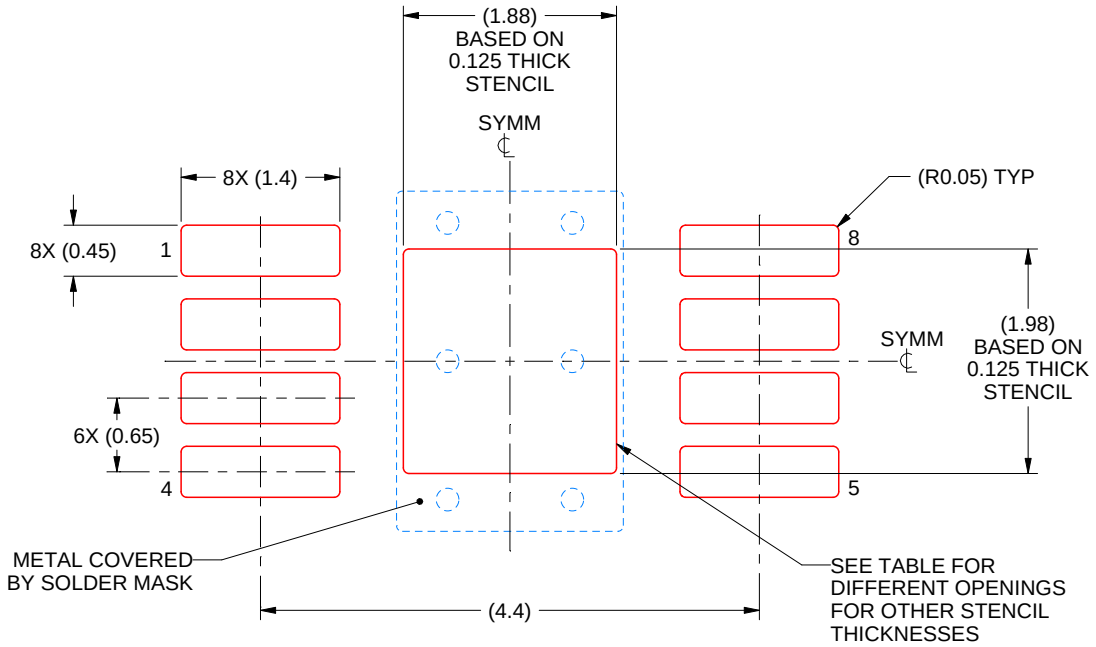

SOLDER PASTE EXAMPLE
EXPOSED PAD 9:
100% PRINTED SOLDER COVERAGE BY AREA
SCALE: 15X

STENCIL THICKNESS	SOLDER STENCIL OPENING
0.1	2.10 X 2.21
0.125	1.88 X 1.98 (SHOWN)
0.15	1.72 X 1.81
0.175	1.59 X 1.67

4218837/A 11/2019

NOTES: (continued)

10. Laser cutting apertures with trapezoidal walls and rounded corners may offer better paste release. IPC-7525 may have alternate design recommendations.
11. Board assembly site may have different recommendations for stencil design.

IMPORTANT NOTICE AND DISCLAIMER

TI PROVIDES TECHNICAL AND RELIABILITY DATA (INCLUDING DATASHEETS), DESIGN RESOURCES (INCLUDING REFERENCE DESIGNS), APPLICATION OR OTHER DESIGN ADVICE, WEB TOOLS, SAFETY INFORMATION, AND OTHER RESOURCES “AS IS” AND WITH ALL FAULTS, AND DISCLAIMS ALL WARRANTIES, EXPRESS AND IMPLIED, INCLUDING WITHOUT LIMITATION ANY IMPLIED WARRANTIES OF MERCHANTABILITY, FITNESS FOR A PARTICULAR PURPOSE OR NON-INFRINGEMENT OF THIRD PARTY INTELLECTUAL PROPERTY RIGHTS.

These resources are intended for skilled developers designing with TI products. You are solely responsible for (1) selecting the appropriate TI products for your application, (2) designing, validating and testing your application, and (3) ensuring your application meets applicable standards, and any other safety, security, or other requirements. These resources are subject to change without notice. TI grants you permission to use these resources only for development of an application that uses the TI products described in the resource. Other reproduction and display of these resources is prohibited. No license is granted to any other TI intellectual property right or to any third party intellectual property right. TI disclaims responsibility for, and you will fully indemnify TI and its representatives against, any claims, damages, costs, losses, and liabilities arising out of your use of these resources.

TI’s products are provided subject to TI’s Terms of Sale (https:www.ti.com/legal/termsofsale.html) or other applicable terms available either on ti.com or provided in conjunction with such TI products. TI’s provision of these resources does not expand or otherwise alter TI’s applicable warranties or warranty disclaimers for TI products.

Mailing Address: Texas Instruments, Post Office Box 655303, Dallas, Texas 75265
Copyright © 2021, Texas Instruments Incorporated