CUSTOMER: **ROPLA**

DISTRIBUTOR:

(PE48AA1)

NO.: TC113032(3)

APPROVE SHEET

[Compliance with RoHS]

PRODUCT: DC BRUSHLESS FAN

USER P/N: _____

Parts No.: JF0515B1L-011-243R

Printed model number on the stick: JF0515B1L--R

(SIGNATURE)

JAMICON GROUP

KAIMEI ELECTRONIC CORP.

TEL:0755-2813 5359

FAX:0755-2813 5384

KAIMEI ELECTRONIC (H.K.) LTD. 凱美電機 承認章

APPROVED	CHECKED	DRAWN
研發經理 2011.3.28 尤耀儀	課長 2011.3.28 李波	王婷 2011/03/28

1. MECHANICAL:

1-01	Dimension	Dimension of fan shall be shown in the outline styling drawing attached.
1-02	Motor	Four-pole motor.
1-03	Frame	Plastic material UL 94V-0 (P.B.T).
1-04	Impeller	Plastic material UL 94V-0 (P.B.T).
1-05	Free drop shock	In minute package condition, the fan should withstand each one drop of three faces from 30cm distance height onto 10 mm thickness of wooden board.

2.ELECTRICAL:

2-01	Rated current	Rated current shall be measured after 30 minutes continuous rotation at rated voltage.
2-02	Start voltage	The voltage that enable to start the fan by sudden switch on.
2-03	Rated Speed	Rated speed shall be measured after 30 minutes continuous rotation at rated voltage.
2-04	Input Power	Input power shall be measured after 30 minutes continuous rotation at rated voltage.
2-05	Lock Current	Locked current shall be measured Within one minute at rotor locked, after 30 minutes continuous rotation at rated voltage in clear air.
2-06	Insulation resistance	More than 10M ohm at 500 V.D.C between lead and housing.
2-07	Dielectric strength	Measured 5 mA(max) trip current at 700 V.A.C for 3 sec. between lead and housing.
2-08	Locked motor protection	Designed to meet UL, CUL and TUV.

3.CHARACTERISTICS:

3-01	Air Flow & Static Pressure	The air flow data and static pressures should be determined in accordance with AMCA standard or DIM 24163 specification in a double- chamber testing with intake-side measurement.
3-02	Noise level	The measurement of noise level is carried out with reference to DIM 45635 in an echoic chamber with the microphone positioned 1 M from the air intake. Testing fan shall be hung in clean air.

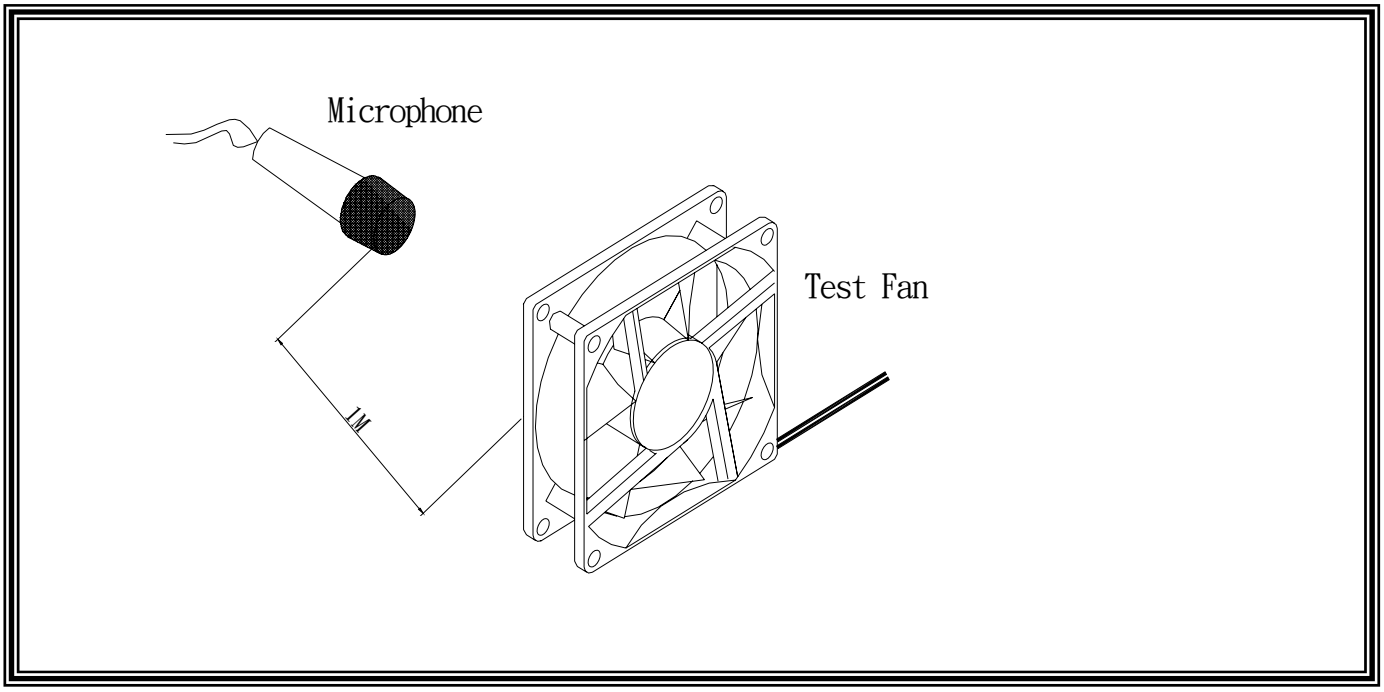

4.ENVIRONMENTAL:

4-01	Operating temperature	-10℃ to 70℃ (ordinary humidity)
4-02	Storage Temperature	-40℃ to 70℃ (ordinary humidity)
4-03	Humidity	After 96 hrs, 95% RH 40±2℃ per MIL-STD-202F method 103B, Humidity test , The measured data of insulation resistance & dielectric strength should meet the specification listed in attach.
4-04	Thermal Shock	After thermal shock test per MIL-STD-202F method 107D, Condition D, The measured data of insulation resistance & dielectric strength should the specification

5.DATA-SHEET:
MODEL JF0515B1L-011-243R
5-1. SPECIFICATION:

NO.	ITEM	SPECIFICATION	UNIT	CONDITION
5-1-01	Dimension	50*50*15	mm	----------
5-1-02	Bearing	Dual ball	---------	----------
5-1-03	Rated Voltage	12.0	VDC	----------
5-1-04	Operating Voltage	7.0 ~ 13.8	VDC	----------
5-1-05	Start Voltage	7.0	VDC	On/off test
5-1-06	Speed	4500	R.P.M	±10%,At rated Speed
5-1-07	Input Current	0.10	Amp	At rated Voltage
5-1-08	Input Power	1.2	Watt	At rated Voltage
5-1-09	Nominal Current	0.16	Amp	At rated Voltage
5-1-10	Air Flow	13.03	CFM	At 0 static Pressure of Rated speed
5-1-11	Static Pressure	0.139	inchH_2O	At 0 air flow of rated speed
5-1-12	Noise	28.6	dBA	At rated speed
5-1-13	Life Expectancy(L10)	80,000	Hours	At 40℃
5-1-14	Motor protection	Impedance protected		
5-1-15	Polarity protection	It will not damage the fan while reverse input.		
5-1-16	Auto Restart	NO	--------	----------
5-1-17	Speed Signal output	NO	--------	----------
5-1-18	Alarm Signal output	NO	--------	----------
5-1-19	Rotation direction	From the label side	--------	Clockwise
5-1-20	Weight	29	Gram	Per each piece
5-1-21	Safety Certificate	UL, CUL, TUV, CE	--------	----------

5-2. LEAD WIRE:

NO.	ITEM	CONDITION			
5-2-01	AWG NO. & Authorize	26 AWG, UL1007			
5-2-02	Color	═	┼		
		Black	Red		
5-2-03	Line Length	275±10mm			
5-2-04	Connector	Notes as: Not available			
5-2-05	Tube	NO			

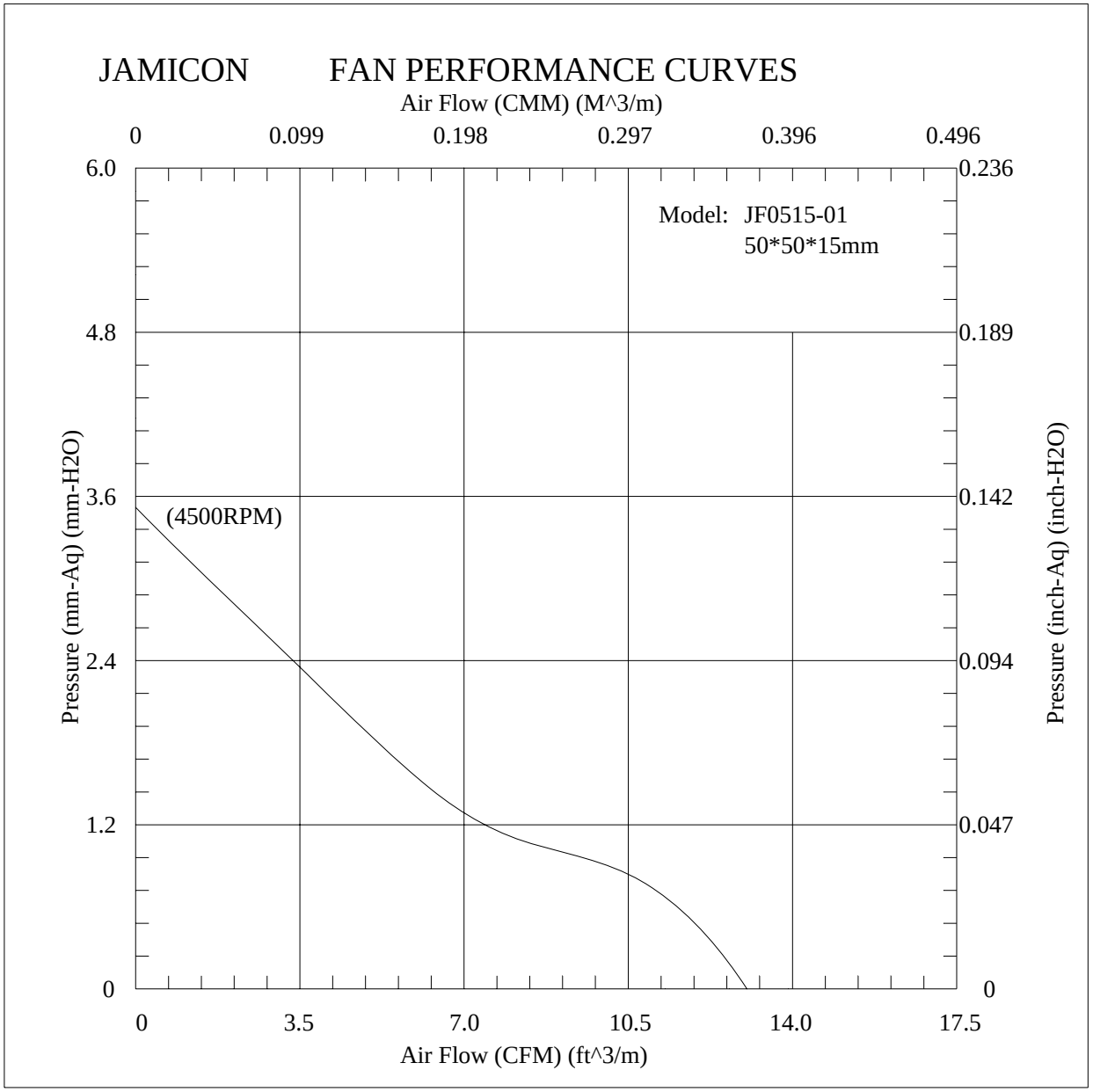
JAMICON FAN PERFORMANCE CURVES
Air Flow (CMM) (M^3/m)
0
0.099
0.198
0.297
0.396
0.496
6.0
4.8
3.6
2.4
1.2
0
0.236
0.189
0.142
0.094
0.047
0
Model: JF0515-01
50*50*15mm
(4500RPM)
Pressure (mm-Aq) (mm-H2O)
Pressure (inch-Aq) (inch-H2O)
0
3.5
7.0
10.5
14.0
17.5
Air Flow (CFM) (ft^3/m)

風扇振動噪音性能測試報告
(The Test Report of Fan Vibration and Noise)

風扇型號(Sample Type) : **JF0515 -01**
基本規格(Properities) : DC 12V 7葉 4極 4500RPM

測試日期(Test Date) : 2006/3/16 PM 02:28:09
測試編號(Test No.) : (1)

測試條件(Test Conditions)

輸入電壓(Input Voltage) :	12 V
量測時間(Measuring Time) :	20 sec
麥克風距離(Mic. Distance) :	100 cm
麥克風角度(Mic. Angle) :	180°
頻域加權(Freq. Weighting) :	A
時域加權(Time Weighting) :	SLOW
背景噪音(Background Noise) :	15.0 dB(A)
溫度(Temperature) :	℃
相對濕度(Relative Humidity) :	%

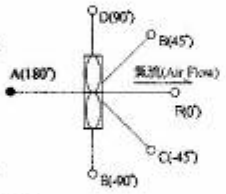

測試結果(Test Results)

電壓(Passing Voltage) :	
電流(Electric Current) :	
消耗功率(Power Dissipation) :	
轉速(Rotation Speed) :	4505 RPM
振動量(Vibration Level) (依據 ISO 2372)	
振動速度(Vib. Velocity) :	0.47 mm/sec RMS
均能聲壓位準(Time-averaged SPL, Leq) (依據 CNS 8753)	
量測點(At Meas. Point) :	28.8 dB(A)
1 米處(At 1m Point) :	28.6 dB(A)
最大聲壓位準(MaxL) :	29.2 dB(A)
最小聲壓位準(MinL) :	28.0 dB(A)

振動加速度頻譜圖(Vibration Acceleration Narrow-band Spectrum)

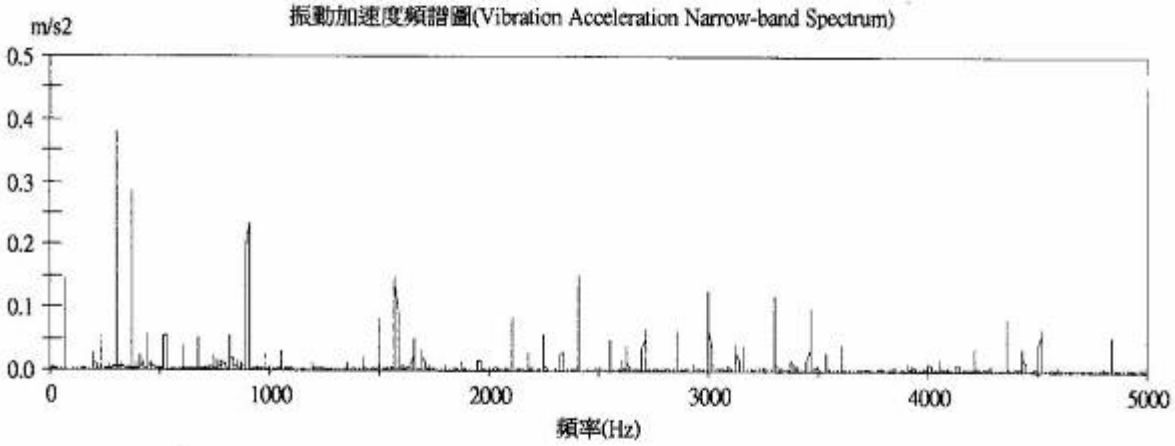

聲壓位準頻譜圖(Sound Pressure Level Octave-band Spectrum)

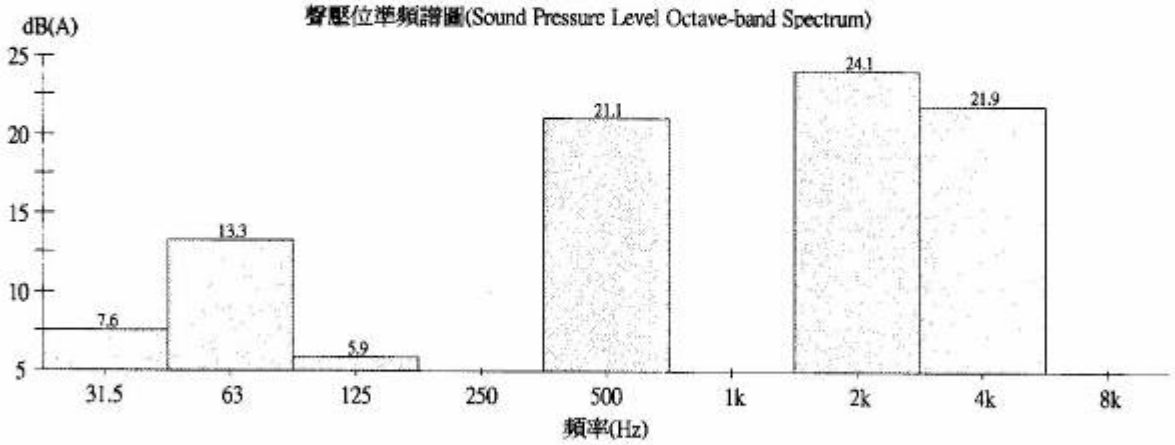

簽核人員 : _____　　操作員 : 簽章 : _____

系統開發(Developer) : 工業技術研究院 機械工業研究所(MIRL/ITRI)　　2006/3/16 PM 02:34:28 列印

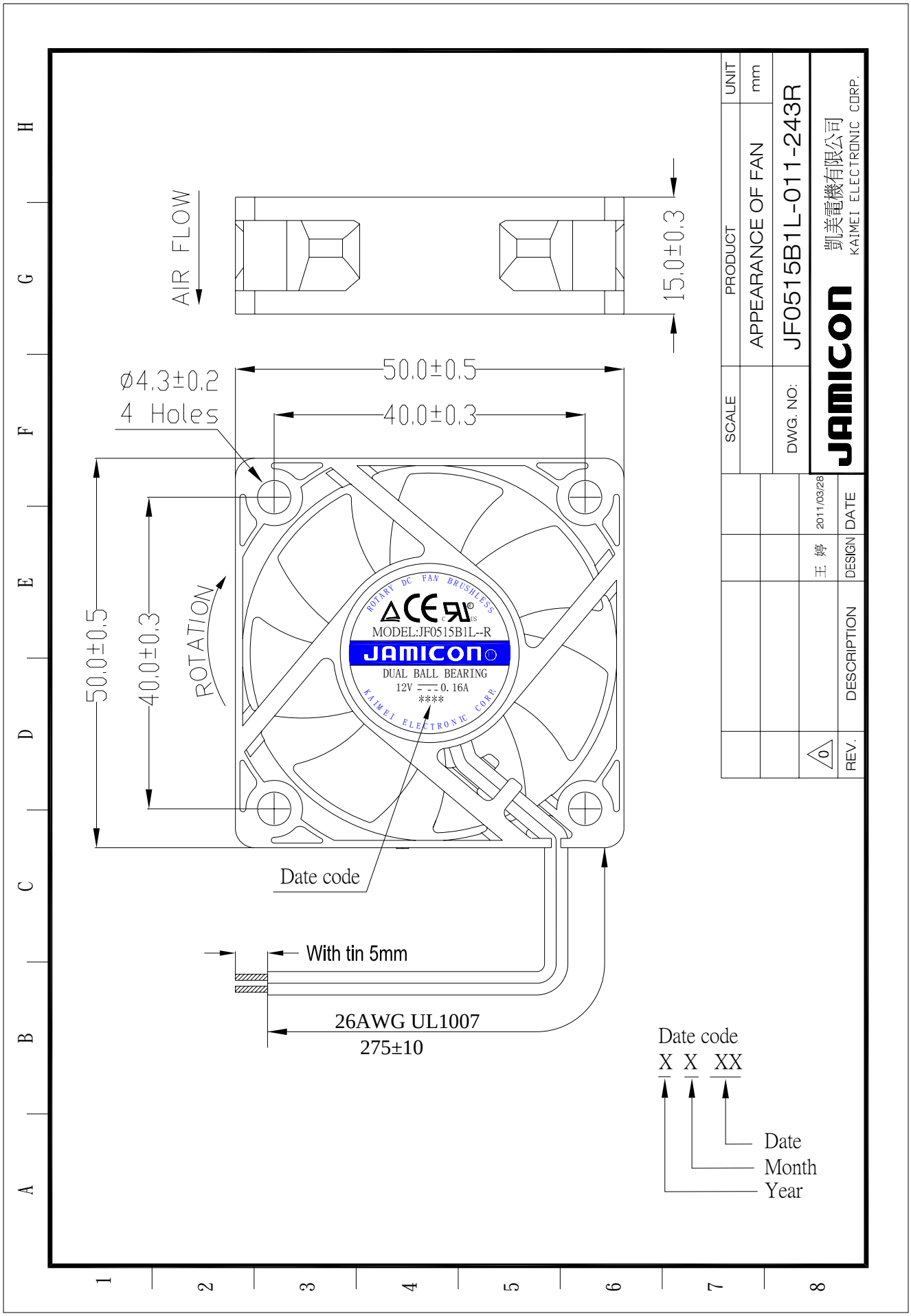
AIR FLOW
15.0±0.3
50.0±0.5
40.0±0.3
ø4.3±0.2
4 Holes
50.0±0.5
40.0±0.3
ROTATION
ROTARY DC FAN BRUSHLESS
MODEL:JF0515B1L--R
JAMICON
DUAL BALL BEARING
12V 0.16A
****
KAIMEI ELECTRONIC CORP.
Date code
With tin 5mm
26AWG UL1007
275±10
Date code
X X XX
Date
Month
Year
UNIT
mm
PRODUCT
APPEARANCE OF FAN
SCALE
DWG. NO:
JF0515B1L-011-243R
JAMICON
凱美電機有限公司
KAIMEI ELECTRONIC CORP.
2011/03/28
王 婷
DATE
DESIGN
DESCRIPTION
REV.
0

GPWV2.E156480
Fans, Electric - Component

Page Bottom

Fans, Electric - Component

See General Information for Fans, Electric - Component

KAIMEI ELECTRONIC CORP E156480
13TH
81 HSIN-TAI-WU RD, SEC 1
HSICHIH, TAIPEI HSIEN 221 TAIWAN

AC fans, Models MA0825H2Bzz, MA0825H2Szz, MA0825M2Bzz, MA0825M2Szz, MA0838H2Bzz, MA083H2Szz, MA0838M2Bzz, MA0838M2Szz, MA0925H2Bzz, MA0925H2Szz, MA0925M2Bzz, MA0925M2Szz, MA0938H2Bzz, MA0938H2Szz, MA0938M2Bzz, MA0938M2Szz, KA0938H2Bzz, KA0938H2Szz, KA0938M2Bzz, KA0938M2Szz, MA1225H2Bzz, MA1225H2Szz, MA1225M2Bzz, MA1225M2Szz, KA1338H2Bzz, KA1338H2Szz, KA1338M2Bzz, KA1338M2Szz, KA1338L2Bzz, KA1338L2Szz, MA1338H2Bzz, MA1338H2Szz, MA1338M2Bzz, MA1338M2Szz, MA2260H2Bzz, MA0825H1Bzz, MA0825H1Szz, MA0825M1Bzz, MA0825M1Szz, MA0838H1Bzz, MA0838H1Szz, MA0838M1Bzz, MA0838M1Szz, MA0925H1Bzz, MA0925H1Szz, MA0925M1Bzz, MA0925M1Szz, MA0938H1Bzz, MA0938H1Szz, MA0938M1Bzz, MA0938M1Szz, KA0938H1Bzz, KA0938H1Szz, KA0938M1Bzz, KA0938M1Szz, MA1225H1Bzz, MA1225H1Szz, MA1225M1Bzz, MA1225M1Szz, KA1338H1Bzz, KA1338H1Sz, KA1338M1Bzz, KA1338M1Szz, KA1338L1Bzz, KA1338L1Szz, MA1338H1Bzz, MA1338H1Szz, MA1338M1Bzz, MA1338M1Szz, MA2260H1Bzz.

Models JA1751H1, JA1751H2, JA1238H1, JA1238H2, JA1238-1H1, JA1238-1H2, JA1225H1, JA1225H2, JA0925H1, JA0925H2, JA0838H1, JA0838H2, JA0825H1, JA0825H2.

Model KAX (A) (B) X_1 and/or X_2, where X may be 0825, 0838, 0925, 1225, 1238 or 1751, (A) may be H1, H2, M1, M2, L1 or L2, (B) may be B or S and X_1, X_2 may be 0 thru 9, A thru Z, blank or "-"; Model MAX (A) (B) X_1 and/or X_2, where X may be 1238, 1538, 1738, 1751, 1755 or 2589, (A) may be H1, H2, M1 or M2, (B) may be B, S and X_1, X_2 may be 0 thru 9, A thru Z or "-".

Models JA1238(a)(c)(b)(x)(y), JA1238HD(b)(x)(y), KA1238(a)(c)(b)(x)(y), KA1238HD(b)(x)(y) series, where (a) may be H, M or L, (c) may be 1 or 2, (b) may be B or S, (x) and (y) may be blank, "-", 0 thru 9 or A thru Z.

Models JA1225H1(b)(x)(y), JA1225L1(b)(x)(y), JA0925H1(b)(x)(y), JA0838H1(b)(x)(y), JA0825H1(b)(x)(y), JA1225H2(b)(x)(y), JA1225L2(b)(x)(y), JA0925H2(b)(x)(y), JA0838H2(b)(x)(y), JA0825H2(b)(x)(y) series, where (b) may be B or S, (x) and (y) may be blank, "-", 0 thru 9 or A thru Z.

Models JA1751H1(b)(x)(y), JA1751H2(b)(x)(y) series, where (b) may be S or B, (x) and (y) may be blank, "-", 0 thru 9 or A thru Z.

DC fans Models JF0207, JF0307, JF0407 followed by B or S, followed by -1HX, -1LX, -1MX, -5HX, -5LM or -5MX; Model JF0210 followed by B, C or S, followed by -5LXXX; Model JF0410 followed by B, C or S, followed by -1XXX, -1MXXX, -1HXXX or -5MXXX; Model JF0413 followed by B, C, H, F or S, followed by -1MXXX or -1HXXX; Model JF0512 followed by B, C or S, followed by -1LXXX or -1MXXX; Model JF0615 followed by B, C or S, followed by -1HXXX, -1LXXX or -1MXXX, -1EXXX, -1VXXX; Model JF0620 followed by B, C, H, F or S, followed by 1VXXX, -1EXXX, 1LXXX, -1MXXX, -1HXXX, -2VXXX, -2EXXX, -2LXXX, -2HXXX or -2MXXX; Model JF0625 followed by B, C, H, F or S, followed by -1VXXX, -1EXXX, -1LXXX, -1MXXX, -1HXXX, -2VXXX, -2EXXX, -2LXXX, -2MXXX or -2HXXX; Model JF0825 followed by B, C, H, F or S, followed by -1EXXX, -1LXXX, -1MXXX, -1HXXX, -2EXXX, -2LXXX, -2MXXX or -2HXXX; where "X" may be 0 thru 9, A thru Z, "-" or blank; Model JF0925 followed by B, C, H, F or S, followed by 1EXXX, -1LXXX, -1MXXX, -1HXXX, -2EXXX, -2LXXX, -2MXXX or -2HXXX; Model JF1225 followed by B, C, H, F or S, followed by -1EXXX -1LXXX, -1MXXX, -1HXXX, -2EXXX, -2LXXX, -2MXXX or -2HXXX; Model JH0410S1.

Model JF0615(X)2(Y)XXX, where (X) may be S, B or C and (Y) may be H, M, L, E or V.

Models JF0210(X)1H(Y), JF0210(X)1M(Y), JF0210(X)5H(Y), JF0210(X)5L(Y), JF0210(X)5M(Y), where (X) may be B, C or S and (Y) may be 0 thru 9, A thru Z or blank.

Models JF0310(X)1H(Y), JF0310(X)1L(Y), JF0310(X)1M(Y), JF0310(X)5H(Y), JF0310(X)5L(Y), JF0310(X)5M(Y), where (X) may be B, C or S and (Y) may be 0 thru 9, A thru Z or blank.

Models JF0A08(X)5H(Y), JF0A08(X)5L(Y), JF0A08(X)5M(Y), where (X) may be B, C or S and (Y) may be 0 thru 9, A thru Z or

blank.

Models JF0B10(X)1H(Y), JF0B10(X)1L(Y), JF0B10(X)1M(Y), JF0B10(X)5H(Y), JF0B10(X)5L(Y), JF0B10(X)5M(Y), where (X) may be B, C or S and (Y) may be 0 thru 9, A thru Z or blank.

Model JF1751(X)4S(Y), where (X) may be B, C or S and (Y) may be 0 thru 9, A thru Z or blank.

Models KF0210S5L, KF0210S5M, KF0210S5H, KF0210B5L, KF0210B5M, KF0210B5H, KF0210B5LD, KF0210B5MD, KF0210B5HD, KF0310S5L, KF0310S5M, KF0310B5L, KF0310B5M, KF0310B5H, KF0310B5LD, KF0310B5MD, KF0310B5HD, KF0410S5L, KF0410S5M, KF0410S5H, KF0410B5L, KF0210B1H, KF0210B1LD, KF0210B1MD, KF0210B1HD, KF0310S1L, KF0310S1M, KF0310S1H, KF0310B1L, KF0310B1M, KF0310B1H, KF0310B1LD, KF0310B1MD, KF0310B1HD, KF0410S1L, KF0410S1M, KF0410S1H, KF0410B1L, KF0410B1M, KF0410B1H, KF0410B1LD, KF0410B1MD, KF0410B1HD, KF0306S1M, KF0306S1H, KF0306B1M, KF0306B1H, KF0406S1M, KF0406S1H, KF0406B1M, KF0406B1H, KF0409S1L, KF0409S1M, KF0409S1H, KF0409B1L, KF0409B1M, KF0409B1H, KF0409B1LD, KF0409B1MD, KF0409B1HD, KF0510S1L, KF0510S1M, KF0510S1H, KF0510B1L, KF0510B1M, KF0510B1H, KF0510B1LD, KF0510B1MD, KF0510B1HD, KB3508S1M, KB3509S1H, KB3508B1M, KB3508B1H, KB4509S1M, KB4509S1H, KB4509B1M, KB4509B1H, KF0410B5M, KF0410B5H, KF0410B5LD, KF0410B5MD, KF0410B5HD, KF0306S5M, KF0306S5H, KF0306B5M, KF0306B5H, KF0406S5M, KF0406S5H, KF0406B5M, KF0406B5H, KF0409S5L, KF0409S5M, KF0409S5H, KF0409B5L, KF0409B5M, KF0409B5H, KF0409B5LD, KF0409B5MD, KF0409B5HD, KF0509S5L, KF0509S5M, KF0509S5H, KF0509B5L, KF0509B5M, KF0509B5H, KF0509B5LD, KF0509B5MD, KF0509B5HD, KB3508S5M, KB3508S5H, KB3508B5M, KB3508B5H, KB4509S5M, KB4509S5H, KB4509B5M, KB4509B5H, KF0210S1L, KF0210S1M, KF0210S1H, KF0210B1L, KF0210B1M, KF0210H5L, KF0210H5M, KF0210H5H, KF0210F5L, KF0210F5M, KF0210F5H, KF0210H1L, KF0210H1M, KF0210H1H, KF0210F1L, KF0210F1M, KF0210F1H, KF0310H5L, KF0310H5M, KF0310H5H, KF0310F5L, KF0310F5M, KF0310F5H, KF0310H1L, KF0310H1M, KF0310H1H, KF0310F1L, KF0310F1M, KF0310F1H, KF0410H1L, KF0410H1M, KF0410H1H, KF0410F1L, KF0410F1M, KF0410F1H, KF0410H5L, KF0410H5M, KF0410H5H, KF0410F5L, KF0410F5M, KF0410F5H, KF0510C1H, KF0510H1L, KF0510H1M, KF0510H1H, KF0510F1L, KF0510F1M, KF0510F1H. All models may have optional suffix "x4x5x6", where "x4", "x5" and "x6" may be A thru Z, 0 thru 9, "-" or blank.

Model KF0xyz, where x may be 420, 515 or 610, y may be B1, B2, B5, S1, S2 or S5 and z may be H, HC, HD, HS, L, LC, LD, LS, M, MC, MD or MS; Model KF123xyz, where x may be 2 or 8, y may be B1, B2, B5, S1, S2 or S4 and z may be H, HA, L, LA, M or MA; Model MF0xyz where x may be 410 or 510, y may be B1, B5, S1 or S5 and z may be H, HC, HD, HS, L, LC, LD, LS, M, MC, MD or MS.

Models KF0210S5L, KF0210S5M, KF0210S5H, KF0210B5L, KF0210B5M, KF0210B5H, KF0210C5L, KF0210C5M, KF0210C5H, KF0210S1L, KF0210S1M, KF0210S1H, KF0210B1L, KF0210B1M, KF0210B1H, KF0210C1L, KF0210C1M, KF0210C1H, KF0310S5L, KF0310S5M, KF0310S5H, KF0310B5L, KF0310B5M, KF0310B5H, KF0310C5L, KF0310C5M, KF0310C5H, KF0310S1L, KF0310S1M, KF0310S1H, KF0310B1L, KF0310B1M, KF0310B1H, KF0310C1L, KF0310C1M, KF0310C1H, KF0410S1L, KF0410S1M, KF0410S1H, KF0410B1L, KF0410B1M, KF0410B1H, KF0410C1L, KF0410C1M, KF0410C1H, KF0410S5L, KF0410S5M, KF0410S5H, KF0410B5L, KF0410B5M, KF0410B5H, KF0410C5L, KF0410C5M, KF0410C5H, KF0510S1L, KF0510S1M, KF0510S1H, KF0510B1L, KF0510B1M, KF0510B1H, KF0510C1L, KF0510C1M, KF0510C1H. All models may have optional suffix "x4x5x6", where "x4", "x5" and "x6" may be A thru Z, 0 thru 9, "-" or blank.

Models KF0306S1M, KF0306S1H, KF0306C1H, KF0306C1S, KF0306S5M, KF0306S5H, KF0306C5M, KF0306C5H, KF0409S1L, KF0409S1M, KF0409S1H, KF0409B1L, KF0409B1M, KF0409B1H, KF0409C1L, KF0409C1M, KF0409C1H, KF0409S5L, KF0409S5M, KF0409S5H, KF0409B5L, KF0409B5M, KF0409B5H, KF0409C5L, KF0409C5M, KF0409C5H, KF0509S5L, KF0509S5M, KF0509S5H, KF0509B5L, KF0509B5M, KF0509B5H, KF0509C5L, KF0509C5M, KF0509C5H. All models may have optional suffix "x4x5x6", where "x4", "x5" and "x6" may be A thru Z, 0 thru 9, "-" or blank.

Models KF0510S5L, KF0510S5M, KF0510S5H, KF0510C5L, KF0510C5M, KF0510C5H, KF0510B5L, KF0510B5M, KF0510B5H, KF0515S5H, KF0515S5M, KF0515S5L, KF0515C5L, KF0515C5M, KF0515C5H, KF0515B5L, KF0515B5M, KF0515B5H, KF0509B1H, KF0509B1L, KF0509B1M, KF0509S1H, KF0509S1L, KF0509S1M, KF0509C1H, KF0509C1L, KF0509C1M, KF0515S1L, KF0515S1M, KF0515S1H, KF0515C1L, KF0515C1M, KF0515C1H, KF0515B1L, KF0515B1M, KF0515B1H, KF0625S1L, KF0625S1M, KF0625S1H, KF0625C1L, KF0625C1M, KF0625C1H, KF0625B1L, KF0625B1M, KF0625B1H, KF0510F5L, KF0510F5M, KF0510F5H, KF0510H5L, KF0510H5M, KF0510H5H. All models may have optional suffix "x4x5x6", where "x4", "x5" and "x6" may be A thru Z, 0 thru 9, "-" or blank.

Models KF0407C1H, KF0407S1H, KF0407C1M, KF0407S1M, KF0407C5H, KF0407S5H, KF0407C5M, KF0407S5M, KF0C07C1H, KF0C07S1H, KF0C07C1M, KF0C07S1M, KF0C07C5H, KF0C07S5H, KF0C07C5M, KF0C07S5M, KF0420B1L, KF0420S1L, KF0420B1M, KF0420S1M, KF0420B1H, KF0420S1H, KF0420B5L, KF0420S5L, KF0420B5M, KF0420S5M, KF0420B5H, KF0420S5H, KF0610S1H, KF0610C1H, KF0610B1H, KF0610C1M, KF0610B1M, KF0610S1M, KF0610C1L, KF0610B1L, KF0610S1L KF0420C1L, KF0420H1L, KF0420F1L, KF0420C1M, KF0420H1M, KF0420F1M, KF0420C1H, KF0420H1H, KF0420F1H, KF0420C5L, KF0420H5L, KF0420F5L, KF0420C5M, KF0420H5M, KF0420F5M, KF0420C5H, KF0420H5H, KF0420F5H, KF0610H1H, KF0610H1M, KF0610H1L, KF0610F1H, KF0610F1M, KF0610F1L. All models may have optional suffix "x4x5x6", where "x4", "x5" and "x6" may be A thru Z, 0 thru 9, "-" or blank.

Models JF0515(A1)1(B)XXX, JF0515(A1)2(B)XXX, JF0615(A)5(C)XXX, JF0615(A)1(D)XXX, JF0615(A)2(D)XXX, JF0620(A)1(D)XXX, JF0620(A)2(D)XXX, JF0625(A1)1(E)XXX, JF0625(A1)2(E)XXX, JF0625(A)4(F)XXX, JF0825(A1)1(D)XXX, JF0825(A1)2(E)XXX, JF0825(A1)4(G)XXX, JF0925(A1)1(D)XXX, JF0925(A1)2(D)XXX, JF0925(A1)4(I)XXX, JF1225(A1)1(D)XXX, JF1225(A1)2(D)XXX, JF1225(A1)4(F)XXX, where (A) may be B, C or S, (B) may be H, M, L or E, (C) may be H, M, L, E or V, (D) may be U or S, (E) may be T, U or S, (F) may be U, S, H, M, L or E, (G) may be U, S, H, M or L, (H) may be S, H, M or L, (I) may be S, H, M, L or E and "X" may be 0 thru 9, A thru Z, blank or "-", (A1) may be B, C, S, H or F.

Models KF0420(A)2(B)(C), KF1225(A)1(D)(C), where (A) may be B, S, C, F or H, (B) may be L, M, H or S, (D) may be V, E, L, M or H and (C) may be XXX, where X may be 0 thru 9, A thru Z, "-" or blank.

Models LF0825(a)1(c)(f)(g)(h)(i)(j), LF0925(b)1(e)(f)(g)(h)(i)(j), LF1225(b)1(e)(f)(g)(h)(i)(j) series, where (a) may be S, B or C, (b) may be S or B, (c) may be S, H, M, L or E, (d) may be H, M, L or E, (e) may be H, M, L, E or V, (f) may be "-" or 0 thru 9 or A thru Z, (g) may be 0 thru 4, (h) may be "-" or 0 thru 9 or A thru Z, (i) may be blank, "-" or 0 thru 9 or A thru Z, (j) may be blank, "-" or 0 thru 9 or A thru Z.

Models KF0B10(b)5(r1)(xy)(z), KF0B10(b)1(r1)(xy)(z), KF0410(b)2(r6)(xy)(z), KF0510(b)2(r2)(xy)(z), KF0610(b)5(r3)(xy)(z), KF0615(b)5(r3)(xy)(z), KF0615(b)1(r4)(xy)(z), KF0615(b)2(r4)(xy)(z), KF0620(b)1(r5)(xy)(z), KF0620(b)2(r5)(xy)(z), KF0715(b)1S(xy)(z), KF0715(b)1(r2)(xy)(z), KF0820(b)1(r7)(xy)(z), KF0820(b)2(r7)(xy)(z), KF1225(b)2(r2)(xy)(z), JF0815(b)1(r8)(xy)(z), JF0815(b)2(r8)(xy)(z), JF1238(b)1(r1)(xy)(z), JF1238(b)2(r1)(xy)(z), JF1238(b)4(r6)(xy)(z) series, where (b) may be S, B, C, H or F, (r1) may be S, H, M, L or E, (r2) may be H, M or L, (r3) may be M, L, E or V, (r4) may be U, S, H, M, L, E or V, (r5) may be S, H, M, L, E or V, (r6) may be S, H, M or L, (r7) may be U, S, H, M, L or E, (r8) may be U, S, H, M or L, (xy) is alphanumeric combination of two digits and/or alphacets, each may be blank, "-", A thru Z or 0 thru 9, (z) may be blank, "-", A thru Z or 0 thru 9.

Models JF1238(b)1(w)(x)(y)(z), JF1238(b)2(w)(x)(y)(z), JF1238(b)4(w)(x)(y)(z), JF1425(b)1(v)(x)(y)(z), JF1425(b)2(v)(x)(y)(z) series, where (b) may be S, B, H or F, (w) may be T or U, (v) may be U, S, H, M, L or E, (x), (y) and (z) may be blank, "-", A thru Z or 0 thru 9.

Models JB055101(u)(w)(x)(y)(z), JB055105(v)(w)(x)(y)(z) series, where (u) may be H, M or L, (v) may be M or L, (w) may be B, S, C, H or F, (x), (y) and (z) may be A through Z, 0 through 9, blank, or "-".

Marking: Company name, "E156480", trademark JAMICON or JAMICON® and model designation.

Last Updated on 2010-01-26

Questions? Notice of Disclaimer Page Top

Copyright © 2010 Underwriters Laboratories Inc. ®

The appearance of a company's name or product in this database does not in itself assure that products so identified have been manufactured under UL's Follow-Up Service. Only those products bearing the UL Mark should be considered to be Listed and covered under UL's Follow-Up Service. Always look for the Mark on the product.

UL permits the reproduction of the material contained in the Online Certification Directory subject to the following conditions: 1. The Guide Information, Designs and/or Listings (files) must be presented in their entirety and in a non-misleading manner, without any manipulation of the data (or drawings). 2. The statement "Reprinted from the Online Certifications Directory with permission from Underwriters Laboratories Inc." must appear adjacent to the extracted material. In addition, the reprinted material must include a copyright notice in the following format: "Copyright © 2010 Underwriters Laboratories Inc.®"

An independent organization working for a safer world with integrity, precision and knowledge

GPWV8.E156480
Fans, Electric Certified for Canada - Component

Page Bottom

Fans, Electric Certified for Canada - Component

See General Information for Fans, Electric Certified for Canada - Component

KAIMEI ELECTRONIC CORP E156480
13TH
81 HSIN-TAI-WU RD, SEC 1
HSICHIH, TAIPEI HSIEN 221 TAIWAN

AC fans, Models MA0825H2Bzz, MA0825H2Szz, MA0825M2Bzz, MA0825M2Szz, MA0838H2Bzz, MA083H2Szz, MA0838M2Bzz, MA0838M2Szz, MA0925H2Bzz, MA0925H2Szz, MA0925M2Bzz, MA0925M2Szz, MA0938H2Bzz, MA0938H2Szz, MA0938M2Bzz, MA0938M2Szz, KA0938H2Bzz, KA0938H2Szz, KA0938M2Bzz, KA0938M2Szz, MA1225H2Bzz, MA1225H2Szz, MA1225M2Bzz, MA1225M2Szz, KA1338H2Bzz, KA1338H2Szz, KA1338M2Bzz, KA1338M2Szz, KA1338L2Bzz, KA1338L2Szz, MA1338H2Bzz, MA1338H2Szz, MA1338M2Bzz, MA1338M2Szz, MA2260H2Bzz, MA0825H1Bzz, MA0825H1Szz, MA0825M1Bzz, MA0825M1Szz, MA0838H1Bzz, MA0838H1Szz, MA0838M1Bzz, MA0838M1Szz, MA0925H1Bzz, MA0925H1Szz, MA0925M1Bzz, MA0925M1Szz, MA0938H1Bzz, MA0938H1Szz, MA0938M1Bzz, MA0938M1Szz, KA0938H1Bzz, KA0938H1Szz, KA0938M1Bzz, KA0938M1Szz, MA1225H1Bzz, MA1225H1Szz, MA1225M1Bzz, MA1225M1Szz, KA1338H1Bzz, KA1338H1Sz, KA1338M1Bzz, KA1338M1Szz, KA1338L1Bzz, KA1338L1Szz, MA1338H1Bzz, MA1338H1Szz, MA1338M1Bzz, MA1338M1Szz, MA2260H1Bzz.

Models JA1751H1, JA1751H2, JA1238H1, JA1238H2, JA1238-1H1, JA1238-1H2, JA1225H1, JA1225H2, JA0925H1, JA0925H2, JA0838H1, JA0838H2, JA0825H1, JA0825H2.

Model KAX (A) (B) X_1 and/or X_2, where X may be 0825, 0838, 0925, 1225, 1238 or 1751, (A) may be H1, H2, M1, M2, L1 or L2, (B) may be B or S and X_1, X_2 may be 0 thru 9, A thru Z, blank or "-"; Model MAX (A) (B) X_1 and/or X_2, where X may be 1238, 1538, 1738, 1751, 1755 or 2589, (A) may be H1, H2, M1 or M2, (B) may be B, S and X_1, X_2 may be 0 thru 9, A thru Z or "-".

Models JA1238(a)(c)(b)(x)(y), JA1238HD(b)(x)(y), KA1238(a)(c)(b)(x)(y), KA1238HD(b)(x)(y) series, where (a) may be H, M or L, (c) may be 1 or 2, (b) may be B or S, (x) and (y) may be blank, "-", 0 thru 9 or A thru Z.

Models JA1225H1(b)(x)(y), JA1225L1(b)(x)(y), JA0925H1(b)(x)(y), JA0838H1(b)(x)(y), JA0825H1(b)(x)(y), JA1225H2(b)(x)(y), JA1225L2(b)(x)(y), JA0925H2(b)(x)(y), JA0838H2(b)(x)(y), JA0825H2(b)(x)(y) series, where (b) may be B or S, (x) and (y) may be blank, "-", 0 thru 9 or A thru Z.

Models JA1751H1(b)(x)(y), JA1751H2(b)(x)(y) series, where (b) may be S or B, (x) and (y) may be blank, "-", 0 thru 9 or A thru Z.

DC fans Models JF0207, JF0307, JF0407 followed by B or S, followed by -1HX, -1LX, -1MX, -5HX, -5LM or -5MX; Model JF0210 followed by B, C or S, followed by -5LXXX; Model JF0410 followed by B, C or S, followed by -1XXX, -1MXXX, -1HXXX or -5MXXX; Model JF0413 followed by B, C or S, followed by -1MXXX or -1HXXX; Model JF0512 followed by B, C or S, followed by -1LXXX or -1MXXX; Model JF0615 followed by B, C or S, followed by -1HXXX, -1LXXX or -1MXXX, -1EXXX, -1VXXX; Model JF0620 followed by B, C or S, followed by 1VXXX, -1EXXX, 1LXXX, -1MXXX, -1HXXX, -2VXXX, -2EXXX, -2LXXX, -2HXXX or -2MXXX; Model JF0625 followed by B, C or S, followed by -1VXXX, -1EXXX, -1LXXX, -1MXXX, -1HXXX, -2VXXX, -2EXXX, -2LXXX, -2MXXX or -2HXXX; Model JF0825 followed by B, C, H, F or S, followed by -1EXXX, -1LXXX, -1MXXX, -1HXXX, -2EXXX, -2LXXX, -2MXXX or -2HXXX; where "X" may be 0 thru 9, A thru Z, "-" or blank; Model JF0925 followed by B, C, H, F or S, followed by 1EXXX, -1LXXX, -1MXXX, -1HXXX, -2EXXX, -2LXXX, -2MXXX or -2HXXX; Model JF1225 followed by B, C, H, F or S, followed by -1EXXX -1LXXX, -1MXXX, -1HXXX, -2EXXX, -2LXXX, -2MXXX or -2HXXX; Model JH0410S1.

Model JF0615(X)2(Y)XXX, where (X) may be S, B or C and (Y) may be H, M, L, E or V.

Models JF0210(X)1H(Y), JF0210(X)1M(Y), JF0210(X)5H(Y), JF0210(X)5L(Y), JF0210(X)5M(Y), where (X) may be B, C or S and (Y) may be 0 thru 9, A thru Z or blank.

Models JF0310(X)1H(Y), JF0310(X)1L(Y), JF0310(X)1M(Y), JF0310(X)5H(Y), JF0310(X)5L(Y), JF0310(X)5M(Y), where (X) may be B, C or S and (Y) may be 0 thru 9, A thru Z or blank.

Models JF0A08(X)5H(Y), JF0A08(X)5L(Y), JF0A08(X)5M(Y), where (X) may be B, C or S and (Y) may be 0 thru 9, A thru Z or

blank.

Models JF0B10(X)1H(Y), JF0B10(X)1L(Y), JF0B10(X)1M(Y), JF0B10(X)5H(Y), JF0B10(X)5L(Y), JF0B10(X)5M(Y), where (X) may be B, C or S and (Y) may be 0 thru 9, A thru Z or blank.

Model JF1751(X)4S(Y), where (X) may be B, C or S and (Y) may be 0 thru 9, A thru Z or blank.

Models KF0210S5L, KF0210S5M, KF0210S5H, KF0210B5L, KF0210B5M, KF0210B5H, KF0210B5LD, KF0210B5MD, KF0210B5HD, KF0310S5L, KF0310S5M, KF0310B5L, KF0310B5M, KF0310B5H, KF0310B5LD, KF0310B5MD, KF0310B5HD, KF0410S5L, KF0410S5M, KF0410S5H, KF0410B5L, KF0210B1H, KF0210B1LD, KF0210B1MD, KF0210B1HD, KF0310S1L, KF0310S1M, KF0310S1H, KF0310B1L, KF0310B1M, KF0310B1H, KF0310B1LD, KF0310B1MD, KF0310B1HD, KF0410S1L, KF0410S1M, KF0410S1H, KF0410B1L, KF0410B1M, KF0410B1H, KF0410B1LD, KF0410B1MD, KF0410B1HD, KF0306S1M, KF0306S1H, KF0306B1M, KF0306B1H, KF0406S1M, KF0406S1H, KF0406B1M, KF0406B1H, KF0409S1L, KF0409S1M, KF0409S1H, KF0409B1L, KF0409B1M, KF0409B1H, KF0409B1LD, KF0409B1MD, KF0409B1HD, KF0510S1L, KF0510S1M, KF0510S1H, KF0510B1L, KF0510B1M, KF0510B1H, KF0510B1LD, KF0510B1MD, KF0510B1HD, KB3508S1M, KB3509S1H, KB3508B1M, KB3508B1H, KB4509S1M, KB4509S1H, KB4509B1M, KB4509B1H, KF0410B5M, KF0410B5H, KF0410B5LD, KF0410B5MD, KF0410B5HD, KF0306S5M, KF0306S5H, KF0306B5M, KF0306B5H, KF0406S5M, KF0406S5H, KF0406B5M, KF0406B5H, KF0409S5L, KF0409S5M, KF0409S5H, KF0409B5L, KF0409B5M, KF0409B5H, KF0409B5LD, KF0409B5MD, KF0409B5HD, KF0509S5L, KF0509S5M, KF0509S5H, KF0509B5L, KF0509B5M, KF0509B5H, KF0509B5LD, KF0509B5MD, KF0509B5HD, KB3508S5M, KB3508S5H, KB3508B5M, KB3508B5H, KB4509S5M, KB4509S5H, KB4509B5M, KB4509B5H, KF0210S1L, KF0210S1M, KF0210S1H, KF0210B1L, KF0210B1M, KF0210H5L, KF0210H5M, KF0210H5H, KF0210F5L, KF0210F5M, KF0210F5H, KF0210H1L, KF0210H1M, KF0210H1H, KF0210F1L, KF0210F1M, KF0210F1H, KF0310H5L, KF0310H5M, KF0310H5H, KF0310F5L, KF0310F5M, KF0310F5H, KF0310H1L, KF0310H1M, KF0310H1H, KF0310F1L, KF0310F1M, KF0310F1H, KF0410H1L, KF0410H1M, KF0410H1H, KF0410F1L, KF0410F1M, KF0410F1H, KF0410H5L, KF0410H5M, KF0410H5H, KF0410F5L, KF0410F5M, KF0410F5H, KF0510C1H, KF0510H1L, KF0510H1M, KF0510H1H, KF0510F1L, KF0510F1M, KF0510F1H. All models may have optional suffix "x4x5x6", where "x4", "x5" and "x6" may be A-Z, 0 9, "-" or blank.

Model KF0xyz, where x may be 420, 515 or 610, y may be B1, B2, B5, S1, S2 or S5 and z may be H, HC, HD, HS, L, LC, LD, LS, M, MC, MD or MS; Model KF123xyz, where x may be 2 or 8, y may be B1, B2, B5, S1, S2 or S4 and z may be H, HA, L, LA, M or MA; Model MF0xyz where x may be 410 or 510, y may be B1, B5, S1 or S5 and z may be H, HC, HD, HS, L, LC, LD, LS, M, MC, MD or MS.

Models KF0210S5L, KF0210S5M, KF0210S5H, KF0210B5L, KF0210B5M, KF0210B5H, KF0210C5L, KF0210C5M, KF0210C5H, KF0210S1L, KF0210S1M, KF0210S1H, KF0210B1L, KF0210B1M, KF0210B1H, KF0210C1L, KF0210C1M, KF0210C1H, KF0310S5L, KF0310S5M, KF0310S5H, KF0310B5L, KF0310B5M, KF0310B5H, KF0310C5L, KF0310C5M, KF0310C5H, KF0310S1L, KF0310S1M, KF0310S1H, KF0310B1L, KF0310B1M, KF0310B1H, KF0310C1L, KF0310C1M, KF0310C1H, KF0410S1L, KF0410S1M, KF0410S1H, KF0410B1L, KF0410B1M, KF0410B1H, KF0410C1L, KF0410C1M, KF0410C1H, KF0410S5L, KF0410S5M, KF0410S5H, KF0410B5L, KF0410B5M, KF0410B5H, KF0410C5L, KF0410C5M, KF0410C5H, KF0510S1L, KF0510S1M, KF0510S1H, KF0510B1L, KF0510B1M, KF0510B1H, KF0510C1L, KF0510C1M, KF0510C1H. All models may have optional suffix "x4x5x6", where "x4", "x5" and "x6" may be A thru Z, 0 thru 9, "-" or blank.

Models KF0510S5L, KF0510S5M, KF0510S5H, KF0510C5L, KF0510C5M, KF0510C5H, KF0510B5L, KF0510B5M, KF0510B5H, KF0515S5H, KF0515S5M, KF0515S5L, KF0515C5L, KF0515C5M, KF0515C5H, KF0515B5L, KF0515B5M, KF0515B5H, KF0509B1H, KF0509B1L, KF0509B1M, KF0509S1H, KF0509S1L, KF0509S1M, KF0509C1H, KF0509C1L, KF0509C1M, KF0515S1L, KF0515S1M, KF0515S1H, KF0515C1L, KF0515C1M, KF0515C1H, KF0515B1L, KF0515B1M, KF0515B1H, KF0625S1L, KF0625S1M, KF0625S1H, KF0625C1L, KF0625C1M, KF0625C1H, KF0625B1L, KF0625B1M, KF0625B1H, KF0510F5L, KF0510F5M, KF0510F5H, KF0510H5L, KF0510H5M, KF0510H5H. All models may have optional suffix "x4x5x6", where "x4", "x5" and "x6" may be A thru Z, 0 thru 9, "-" or blank.

Models KF0407C1H, KF0407S1H, KF0407C1M, KF0407S1M, KF0407C5H, KF0407S5H, KF0407C5M, KF0407S5M, KF0C07C1H, KF0C07S1H, KF0C07C1M, KF0C07S1M, KF0C07C5H, KF0C07S5H, KF0C07C5M, KF0C07S5M, KF0420B1L, KF0420S1L, KF0420B1M, KF0420S1M, KF0420B1H, KF0420S1H, KF0420B5L, KF0420S5L, KF0420B5M, KF0420S5M, KF0420B5H, KF0420S5H, KF0610S1H, KF0610C1H, KF0610B1H, KF0610C1M, KF0610B1M, KF0610S1M, KF0610C1L, KF0610B1L, KF0610S1L, KF0420C1L, KF0420H1L, KF0420F1L, KF0420C1M, KF0420H1M, KF0420F1M, KF0420C1H, KF0420H1H, KF0420F1H, KF0420C5L, KF0420H5L, KF0420F5L, KF0420C5M, KF0420H5M, KF0420F5M, KF0420C5H, KF0420H5H, KF0420F5H, KF0610H1H, KF0610H1M, KF0610H1L, KF0610F1H, KF0610F1M, KF0610F1L. All models may have optional suffix "x4x5x6", where "x4", "x5" and "x6" may be A thru Z, 0 thru 9, "-" or blank.

Models JF0515(A1)1(B)XXX, JF0515(A1)2(B)XXX, JF0615(A)5(C)XXX, JF0615(A)1(D)XXX, JF0615(A)2(D)XXX, JF0620(A)1(D)XXX, JF0620(A)2(D)XXX, JF0625(A1)1(E)XXX, JF0625(A1)2(E)XXX, JF0625(A1)4(F)XXX, JF0825(A1)1(D)XXX, JF0825(A1)2(E)XXX, JF0825(A1)4(G)XXX, JF0925(A1)1(D)XXX, JF0925(A1)2(D)XXX, JF0925(A1)4(I)XXX, JF1225(A1)1(D)XXX, JF1225(A1)2(D)XXX, JF1225(A1)4(F)XXX, where (A) may be B, C or S, (B) may be H, M, L or E, (C) may be H, M, L, E or V, (D) may be U or S, (E) may be T, U or S, (F) may be U, S, H, M, L or E, (G) may be U, S, H, M or L, (H) may be S, H, M or L, (I) may be S, H, M, L or E and "X" may be 0 thru 9, A thru Z, blank or "-" , (A1) may be B, C, S, H or F.

Models KF0420(A)2(B)(C), KF1225(A)1(D)(C), where (A) may be B, S, C, F or H, (B) may be L, M, H or S, (D) may be V, E, L, M or H and (C) may be XXX, where X may be 0 thru 9, A thru Z, "-" or blank.

Models LF0825(a)1(c)(f)(g)(h)(i)(j), LF0925(b)1(d)(f)(g)(h)(i)(j), LF1225(b)1(e)(f)(g)(h)(i)(j) series, where (a) may be S, B or C, (b) may be S or B, (c) may be S, H. M, L or E, (d) may be H. M, L or E, (e) may be H. M, L, E or V, (f) may be "-" or 0 thru 9 or A thru Z, (g) may be 0 thru 4, (h) may be "-" or 0 thru 9 or A thru Z, (i) may be blank, "-" or 0 thru 9 or A thru Z, (j) may be blank, "-" or 0 thru 9 or A thru Z.

Models KF0810(b)5(r1)(xy)(z), KF0810(b)1(r1)(xy)(z), KF0410(b)2(r6)(xy)(z), KF0510(b)2(r2)(xy)(z), KF0610(b)5(r3)(xy)(z), KF0615(b)5(r3)(xy)(z), KF0615(b)1(r4)(xy)(z), KF0615(b)2(r4)(xy)(z), KF0620(b)1(r5)(xy)(z), KF0620(b)2(r5)(xy)(z), KF0715(b)1S(xy)(z), KF0715(b)1(r2)(xy)(z), KF0820(b)1(r7)(xy)(z), KF0820(b)2(r7)(xy)(z), KF1225(b)2(r2)(xy)(z), JF0815(b)1(r8)(xy)(z), JF0815(b)2(r8)(xy)(z), JF1238(b)1(r1)(xy)(z), JF1238(b)2(r1)(xy)(z), JF1238(b)4(r6)(xy)(z) series, where (b) may be S, B, C, H or F, (r1) may be S, H, M, L or E, (r2) may be H, M or L, (r3) may be M, L, E or V, (r4) may be U, S, H, M, L, E or V, (r5) may be S, H, M, L, E or V, (r6) may be S, H, M or L, (r7) may be U, S, H, M, L or E, (r8) may be U, S, H, M or L, (xy) is alphanumeric combination of two digits and/or alphabets, each may be blank, "-", A thru Z or 0 thru 9; (z) may be blank, "-", A thru Z or 0 thru 9.

Models JF1238(b)1(w)(x)(y)(z), JF1238(b)2(w)(x)(y)(z), JF1238(b)4(w)(x)(y)(z), JF1425(b)1(v)(x)(y)(z), JF1425(b)2(v)(x)(y)(z) series, where (b) may be S, B, H or F, (w) may be T or U, (v) may be U, S, H, M, L or E, (x), (y) and (z) may be blank, "-", A thru Z or 0 thru 9.

Models JB055101(u)(w)(x)(y)(z), JB055105(v)(w)(x)(y)(z) series, where (u) may be H, M or L, (v) may be M or L, (w) may be B, S, C, H or F, (x), (y) and (z) may be A through Z, 0 through 9, blank, or "-".

Marking: Company name, model designation and Recognized Component Mark for Canada, c RU.
Last Updated on 2010-01-26

Questions? Notice of Disclaimer Page Top

Copyright ©2010 Underwriters Laboratories Inc.®

The appearance of a company's name or product in this database does not in itself assure that products so identified have been manufactured under UL's Follow-Up Service. Only those products bearing the UL Mark should be considered to be Listed and covered under UL's Follow-Up Service. Always look for the Mark on the product.

UL permits the reproduction of the material contained in the Online Certification Directory subject to the following conditions: 1. The Guide Information, Designs and/or Listings (files) must be presented in their entirety and in a non-misleading manner, without any manipulation of the data (or drawings). 2. The statement "Reprinted from the Online Certifications Directory with permission from Underwriters Laboratories Inc." must appear adjacent to the extracted material. In addition, the reprinted material must include a copyright notice in the following format: "Copyright © 2010 Underwriters Laboratories Inc.®"

An independent organization working for a safer world with integrity, precision and knowledge.

Zertifikat *Certificate*

TÜV

Zertifikat Nr. *Certificate No.*	Blatt *Page*
R 50029788	0007

Ihr Zeichen *Client Reference*	Unser Zeichen *Our Reference*	Ausstellungsdatum	*Date of Issue (day/mo/yr)*
KL230506/DTI	ZTW1-LYA- 10007289 002	28.06.2006	

Genehmigungsinhaber ***License Holder***
Kaimei Electronic Corp.
13th Fl., No. 81
Sec. 1, Hsin-Tai-Wu Rd.
Hsichih, Taipei Hsien 221
Taiwan

Fertigungsstätte ***Manufacturing Plant***
Kaimei Electronic (HK), Ltd.
10th Industry Area
2nd Road, Donghuan, Long Hua
Shenzhen City, Guangdong
P.R. China

Prüfzeichen ***Test Mark***

TÜV Rheinland Product Safety | BAUART GEPRÜFT | TYPE APPROVED

Geprüft nach ***Tested acc. to***
EN 60950-1:2001+A11

Zertifiziertes Produkt (Geräteidentifikation) / ***Certified Product (Product Identification)*** — **Lizenzentgelte - Einheit** / ***License Fee - Unit***

Ventilator (DC Fan)

wie Blatt (as page) 01
Ergänzung (Addition)

Bezeichnung (Type Designation)	: JF0815X12UYYY(JAMICON)	1
X1 steht für (stands for)	: S, B, C, H oder (or) F	1
Y steht für (stands for)	: 0-9, A-Z order (or) freibleibend (blank)	1
Änderung für Bezeichnung (Change for Type Designation)	: JF0515X11X2YYY JF0515X12X2YYY JF0625X11X5YYY JF0625X12X5YYY JF0625X14X6YYY	
X1 steht für (stands for)	: S, B, C, H oder (or) F	
X2 steht für (stands for)	: H, M, L oder (or) E	
X5 steht für (stands for)	: T, U oder (or) S	
X6 steht für (stands for)	: U, S, H, M, L oder (or) E	
Y steht für (stands for)	: 0-9, A-Z order (or) freibleibend (blank)	

TÜV Rheinland Product Safety GmbH — TÜV Rheinland — Zertifizierungsstelle

3

ANLAGE (Appendix): 1.1

Dem Zertifikat liegt unsere Prüf- und Zertifizierungsordnung zugrunde.
Das Produkt entspricht den o.g. Anforderungen, die Herstellung wird überwacht.
This certificate is based on our Testing and Certification Regulation. The product fulfills above-mentioned-requirements, the production is subject to surveillance.

Zertifizierungsstelle

TÜV Rheinland Product Safety GmbH, Am Grauen Stein, D-51105 Köln

Tel.:(+49/221)8 06 - 13 71 Fax:(+49/221)8 06 - 39 35 e-mail: Althoff@de.tuv.com

Dipl.-Ing. F. Stoelzel

ATTACHMENT-1

Model Nos.	Rating	Model Nos.	Rating
JF0815(X1)1U(X4)	12Vdc, 0.34A	JF0815(X1)2U(X4)	24Vdc, 0.17A
JF0815(X1)1S(X4)	12Vdc, 0.22A	JF0815(X1)2S(X4)	24Vdc, 0.14A
JF0815(X1)1H(X4)	12Vdc, 0.17A	JF0815(X1)2H(X4)	24Vdc, 0.10A
JF0815(X1)1M(X4)	12Vdc, 0.11A	JF0815(X1)2M(X4)	24Vdc, 0.07A
JF0815(X1)1L(X4)	12Vdc, 0.06A	JF0815(X1)2L(X4)	24Vdc, 0.06A
JF0515(X1)1H(X4)	12Vdc, 0.24A	JF0515(X1)2H(X4)	24Vdc, 0.13A
JF0515(X1)1M(X4)	12Vdc, 0.22A	JF0515(X1)2M(X4)	24Vdc, 0.12A
JF0515(X1)1L(X4)	12Vdc, 0.16A	JF0515(X1)2L(X4)	24Vdc, 0.11A
JF0515(X1)1E(X4)	12Vdc, 0.12A	JF0515(X1)2E(X4)	24Vdc, 0.08A
JF0625(X1)1T(X4)	12Vdc, 0.38A	JF0625(X1)4U(X4)	48Vdc, 0.11A
JF0625(X1)1U(X4)	12Vdc, 0.30A	JF0625(X1)4S(X4)	48Vdc, 0.09A
JF0625(X1)1S(X4)	12Vdc, 0.22A	JF0625(X1)4H(X4)	48Vdc, 0.08A
JF0625(X1)2T(X4)	24Vdc, 0.21A	JF0625(X1)4M(X4)	48Vdc, 0.07A
JF0625(X1)2U(X4)	24Vdc, 0.16A	JF0625(X1)4L(X4)	48Vdc, 0.06A
JF0625(X1)2S(X4)	24Vdc, 0.14A	JF0625(X1)4E(X4)	48Vdc, 0.05A
JF0825(X1)1U(X4)	12Vdc, 0.37A	JF0825(X1)4U(X4)	48Vdc, 0.12A
JF0825(X1)1S(X4)	12Vdc, 0.26A	JF0825(X1)4S(X4)	48Vdc, 0.10A
JF0825(X1)2T(X4)	24Vdc, 0.27A	JF0825(X1)4H(X4)	48Vdc, 0.08A
JF0825(X1)2U(X4)	24Vdc, 0.21A	JF0825(X1)4M(X4)	48Vdc, 0.06A
JF0825(X1)2S(X4)	24Vdc, 0.17A	JF0825(X1)4L(X4)	48Vdc, 0.05A
JF0925(X1)1U(X4)	12Vdc, 0.42A	JF0925(X1)4S(X4)	48Vdc, 0.13A
JF0925(X1)1S(X4)	12Vdc, 0.32A	JF0925(X1)4H(X4)	48Vdc, 0.09A
		JF0925(X1)4M(X4)	48Vdc, 0.08A
JF0925(X1)2U(X4)	24Vdc, 0.24A	JF0925(X1)4L(X4)	48Vdc, 0.06A
JF0925(X1)2S(X4)	24Vdc, 0.18A	JF0925(X1)4E(X4)	48Vdc, 0.05A
JF1225(X1)1U(X4)	12Vdc, 0.50A	JF1225(X1)4U(X4)	48Vdc, 0.14A
JF1225(X1)1S(X4)	12Vdc, 0.37A	JF1225(X1)4S(X4)	48Vdc, 0.12A
		JF1225(X1)4H(X4)	48Vdc, 0.10A
JF1225(X1)2U(X4)	24Vdc, 0.28A	JF1225(X1)4M(X4)	48Vdc, 0.08A
JF1225(X1)2S(X4)	24Vdc, 0.21A	JF1225(X1)4L(X4)	48Vdc, 0.07A
		JF1225(X1)4E(X4)	48Vdc, 0.06A

(X1) may be S, B, C, H or F;
(X4) may be three digits, each may be blank, "-", 0-9 or A-Z, for marketing purpose.

TÜV Rheinland Group			Kaimei Electronic Corp.		DAVID TECHNOLOGY INC. (name of authorized person)
22.06.06			14-June-06	KEVIN LIN	6/14
Date	Name	Signature	Date	Name	Stamp & Signature of licenseholder

CE

SPORTON LAB.

Certificate No: EC2D2008-03

CERTIFICATE

EQUIPMENT: DC FAN
MODEL NO. : JFX1X2X3X4X5X6X7X8, KFX1X2X3X4X5X6X7X8
APPLICANT : Kaimei Electronic Corp.
13th Fl., No. 81, Sec. 1, Hsin Tai Wu Road, Hsichih, Taipei, Taiwan, R.O.C.

SPORTON LAB.

I HEREBY CERTIFY THAT:

THE MEASUREMENTS SHOWN IN THIS TEST REPORT WERE MADE IN ACCORDANCE WITH THE PROCEDURES GIVEN IN **EUROPEAN COUNCIL DIRECTIVE 2004/108/EC.** THE EQUIPMENT WAS **PASSED** THE TEST PERFORMED ACCORDING TO **European Standard EN 55022:2006 Class B, EN 61000-3-2:2006, EN 61000-3-3:1995/A1:2001/A2:2005 and EN 55024:1998/A1:2001/A2:2003 (IEC 61000-4-2:1995/A2:2000, IEC 61000-4-3:2006, IEC 61000-4-4:2004,IEC 61000-4-5:2005, IEC 61000-4-6:2006, IEC 61000-4-8:1993/A1:2000, IEC 61000-4-11:2004).** THE TEST WAS CARRIED OUT ON **May 28, 2008** AT **SPORTON INTERNATIONAL INC. LAB.**

Castries Huang
Supervisor

SPORTON INTERNATIONAL INC. 6F, No.106, Sec.1, Hsin Tai Wu Rd., Hsi Chih, Taipei Hsien , Taiwan, R.O.C.

ACCORDING TO **European Standard EN 55022:2006 Class B, EN 61000-3-2:2006, EN 61000-3-3:1995/A1:2001/A2:2005 and EN 55024:1998/A1:2001/A2:2003 (IEC 61000-4-2:1995/A2:2000, IEC 61000-4-3:2006, IEC 61000-4-4:2004,IEC 61000-4-5:2005, IEC 61000-4-6:2006, IEC 61000-4-8:1993/A1:2000, IEC 61000-4-11:2004).**

More detail information of Model No.:

X1 means for Width x Width = 02, 03, 04, 05, 06, 07, 08, 09, 0A, 0B, 0C, 12, 15

Where 02=25x25, 03=30x30, 04=40x40, 05=50x50, 06=60x60, 07=70x70, 08=80x80, 09=92x92, 0A=20x20, 0B=35x35, 0C=45X45, 12=120x120, 17= ϕ 172 or 172x150 mm

X2 means for thickness = 06, 07, 09, 10, 12, 15, 20, 25 or 25.4, 32, 38, 51

Where 06= 6, 07=7, 09=9 or 10, 10= 10, 12=12, 15=15, 20=20, 25= 25 or 25.4, 32=32, 38=38, 51=51 mm

Where the cross list for X1&X2 as the following:

0A10, 0206, 0207, 0210, 0306, 0307, 0310, 0B06, 0B07, 0B10, 0406, 0407, 0409, 0410, 0412, 0415, 0420, 0425, 0C07, 0C10, 0509, 0510, 0512, 0515, 0520, 0525, 0610, 0615, 0620, 0625, 0638, 0710, 0715, 0720, 0725, 0815, 0820, 0825, 0832, 0838, 0925, 0932, 0938, 1225, 1232, 1238, 1738, 1751

X3 means for bearing type = S, B, H, C

Where B = Dual Ball, S = Sleeve, C = Ball + Sleeve, H = HTLS, F = Free Wheel

X4 means for rated voltage =1 (12V), 2 (24V), 3 (32V), 4(48V), 5(5V), A(3V), B (25.5V), C(42V), D(18V), E(15V)

X5 means for rotation speed =T, U, S, H, M, L, E, V or 7, 6, 5, 4, 3, 2, 1, 0.

Where T or 7 means speed higher than U or 6 speed code,

U or 6 means speed higher than S or 5 speed code,

S or 5 means speed higher than H or 4 speed code,

H or 4 means Standard-high speed code,

M or 3 means Middle speed code,,

L or 2 means Low speed code,

E or 1 means speed lower than L speed code,

V or 0 means speed lower than E speed code.

X6, X7, X8 means the internal code to distinguish the wiring, frame and blade type or the dimension of the screw hole and or the color of the above material and also for special printing characters on the label requested by the client.

Castries Huang

Castries Huang
Supervisor