Ultrafast Recovery Rectifiers

Primary characteristics		
Parameter	**Value**	**Unit**
Peak repetitive reverse voltage	200	V
Maximum Average Forward Rectified Current (per device)	30	A

Features

- **TO-247S** case for easy automatic insertion.
- Pb-free and **RoHS** compliant
- High forward surge capability
- High current capability
- High speed switching capability
- For us in low voltage, high frequency inverters
- Solder bath temperature: 275°C max., 10s, per JESD22-106
- Weight: 4.48g (0.158oz)

Case dimensions

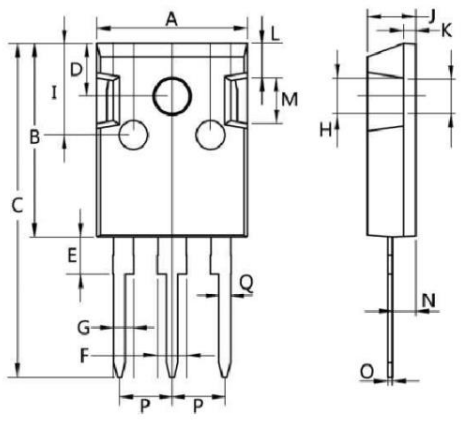

TO-247S

Unit	A	B	C	D	E	F	G	H	I
mm	15.5 ±0.5	20 ±0.5	34.5 ±1.0	5.5 ±0.5	4.0 ±0.5	3.0 ±0.5	2.1 -0.35 +0.40	3.5 ±0.5	10 ±1.0

Unit	J	K	L	M	N	O	P	Q
mm	5.0 ±0.1	1.15 ±0.15	4.0 ±0.25	5.0 ±0.25	2.0 ±0.2	0.52 -0.07 +0.08	5.08 Typ.	1.25 ±0.05

Maximum ratings (per leg, T_a = 25°C)

Parameter		Symbol	Value	Unit
Maximum repetitive peak reverse voltage		V_{RRM}	200	V
Maximum RMS voltage		V_{RMS}	140	V
Maximum DC blocking voltage		V_{DC}	200	V
Maximum average forward rectified current	Per leg	I_o	15	A
	Total		30	A
Peak forward surge current, 8.3ms single half sine-wave superimposed on rated load (JEDEC method)		I_{FSM}	150	A
Maximum reverse recovery time @I_F=0.5A, I_R=1.0A, I_{RR}=0.25A		t_{rr}	25	ns
Typical thermal resistance [1]		$R_{\theta JC}$, $R_{\theta JA}$	2.0	°C/W
Operating junction and storage temperature range		T_j, T_{STG}	-55 ~ 175	°C

1) Thermal resistance from junction to case per leg mounted on heatsink

Electrical characteristics (per leg)

Parameter			Symbol	Value		Unit
Forward voltage drop [2]	I_F=3.0A	T_A=25°C	V_F	0.79	-	V
		T_A=125°C		0.65	-	
	I_F=5.0A	T_A=25°C		0.84	-	
		T_A=125°C		0.71	-	
	I_F=15A	T_A=25°C		0.98	1.05	
		T_A=125°C		0.88	-	
Maximum reverse current @V_R=200V		T_A=25°C	I_R	0.1	10	µA
		T_A=125°C		2.0	-	

2) Pulse test: 300µs pulse width, 1% duty cycle

Maximum forward current derating curve

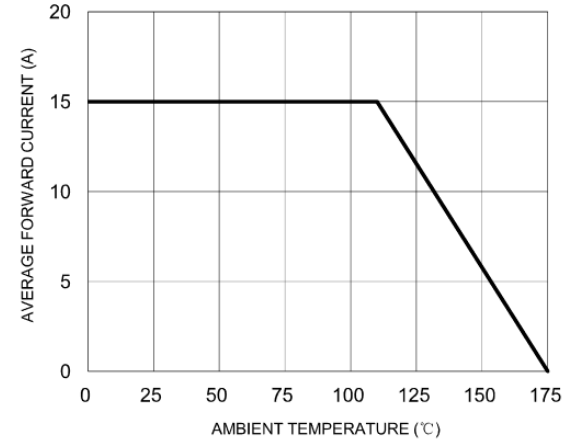

Maximum non-repetitive forward surge current per leg

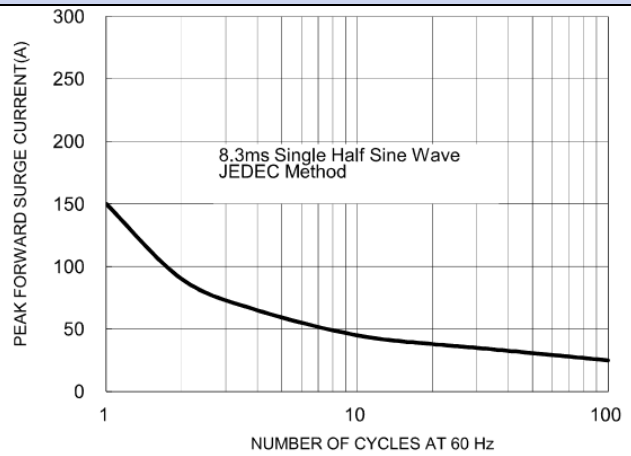

Typical forward characteristics per leg

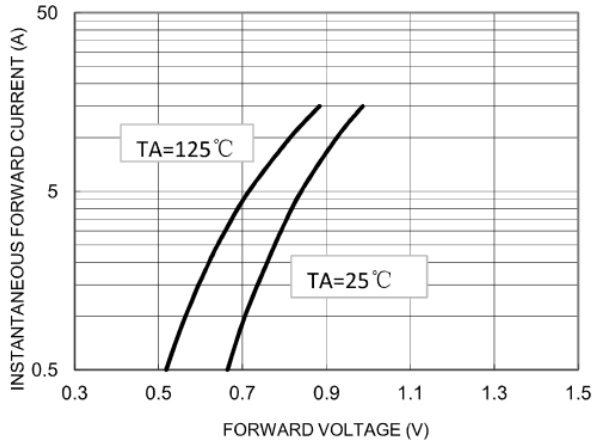

Typical reverse characteristics per leg

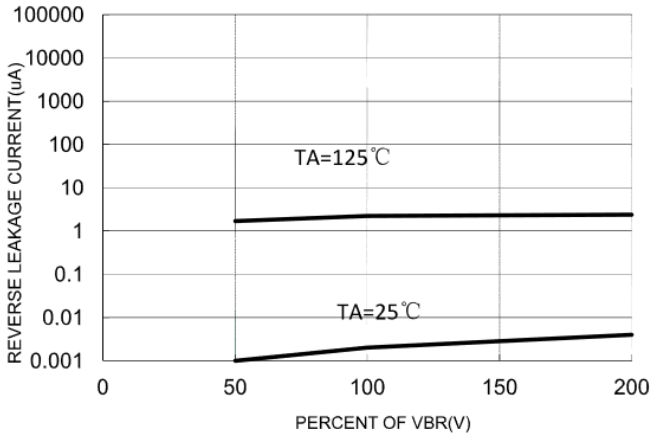

Ordering information			
Part Number	**Package**	**Shipping Quantity**	**Dimensions**
MUR3020PTS	TO-247S	**30 pcs / tube** **600 pcs / small box** **2400 pcs / big box**	---

Disclaimer

Akyga semi reserves the right to make changes without notice to any product specification herein, to make corrections, modifications, enhancements or other changes. Akyga semi or anyone on its behalf assumes no responsibility or liability for any errors or inaccuracies. Data sheet specifications and its information contained are intended to provide a product description only. "Typical" parameters which may be included on Akyga semi data sheets and/ or specifications can and do vary in different applications and actual performance may vary over time. Akyga semi does not assume any liability arising out of the application or use of any product or circuit. Akyga semi products are not designed, intended or authorized for use in medical, life-saving implant or other applications intended for life-sustaining or other related applications where a failure or malfunction of component or circuitry may directly or indirectly cause injury or threaten a life without expressed written approval of Akyga semi. Customers using or selling Akyga semi components for use in such applications do so at their own risk and shall agree to fully indemnify Akyga semi and its subsidiaries harmless against all claims, damages and expenditures.